Data sheet



CFS50-AEV10X03

CFS50

MOTOR FEEDBACK SYSTEMS

SICK
Sensor Intelligence.

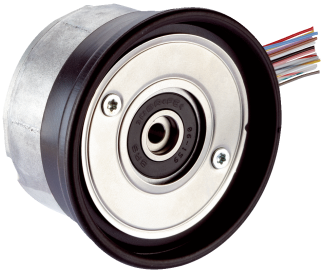

Illustration may differ

Ordering information

Type	part no.
CFS50-AEV10X03	1065229

Other models and accessories → www.sick.com/CFS50

Detailed technical data

Performance

Number of lines per revolution	1,024 [1]
Measuring step	90° /number of lines
Commutation signals	3 pole pairs (See diagram, different commutation on request)
Reference signal, number	1
Reference signal, position	90° electric, logically gated with A and B
Operating speed	≤ 6,000 min⁻¹

[1] Number of lines from 1 ... 1,000 and > 4,096 ... 65,536 on request.

Interfaces

Communication interface	Incremental

Electrical data

Connection type	Stranded wire, 15-pin, radial
Supply voltage	4.5 V DC ... 5.5 V DC
Current consumption	60 mA [1]
Maximum output frequency	≤ 820 kHz
MTTF: mean time to dangerous failure	355 years (EN ISO 13849) [2]

[1] Without load.
[2] This product is a standard product and does not constitute a safety component as defined in the Machinery Directive. Calculation based on nominal load of components, average ambient temperature 60 °C, frequency of use 8760 h/a. All electronic failures are considered hazardous. For more information, see document no. 8015532.

Mechanical data

Shaft version	Tapered shaft
Flange type / stator coupling	Rubber support
Dimensions	See dimensional drawing
Weight	0.1 kg
Moment of inertia of the rotor	10 gcm²
Operating speed	12,000 min⁻¹
Angular acceleration	≤ 200,000 rad/s²

Operating torque	0.2 Ncm
Start up torque	0.4 Ncm
Permissible movement of the drive element, static	Radial ± 0.75 mm axial
Permissible movement of the drive element, dynamic	± 0.1 mm radial ± 0.2 mm axial
Angular motion perpendicular to the rotational axis, static	± 0.005 mm/mm
Angular motion perpendicular to the rotational axis, dynamic	± 0.0025 mm/mm
Life of ball bearings	3.6 x 10^9 revolutions

Ambient data

Operating temperature range	–20 °C ... +115 °C
Storage temperature range	–40 °C ... +125 °C, without package
Relative humidity/condensation	90 %, Condensation not permitted
Resistance to shocks	100 g, 10 ms (according to EN 60068-2-27)
Frequency range of resistance to vibrations	20 g, 10 Hz ... 2,000 Hz (EN 60068-2-6)
EMC	According to EN 61000-6-2 and EN 61000-6-3 [1]
Enclosure rating	IP40 (IEC 60529)

[1] The EMC according to the standards quoted is achieved when the motor feedback system is mounted in an electrically conductive housing, which is connected to the central earthing point of the motor controller via a cable screen. The GND-(0 V) connection of the supply voltage is also grounded here. If other shielding concepts are used, users must perform their own tests.

Certificates

EU declaration of conformity	✓
UK declaration of conformity	✓
ACMA declaration of conformity	✓
China-RoHS	✓

Classifications

ECLASS 5.0	27270501
ECLASS 5.1.4	27270501
ECLASS 6.0	27270590
ECLASS 6.2	27270590
ECLASS 7.0	27270501
ECLASS 8.0	27270501
ECLASS 8.1	27270501
ECLASS 9.0	27270501
ECLASS 10.0	27273805
ECLASS 11.0	27273901
ECLASS 12.0	27273901
ETIM 5.0	EC001486
ETIM 6.0	EC001486
ETIM 7.0	EC001486

ETIM 8.0	EC001486
UNSPSC 16.0901	41112113

Dimensional drawing

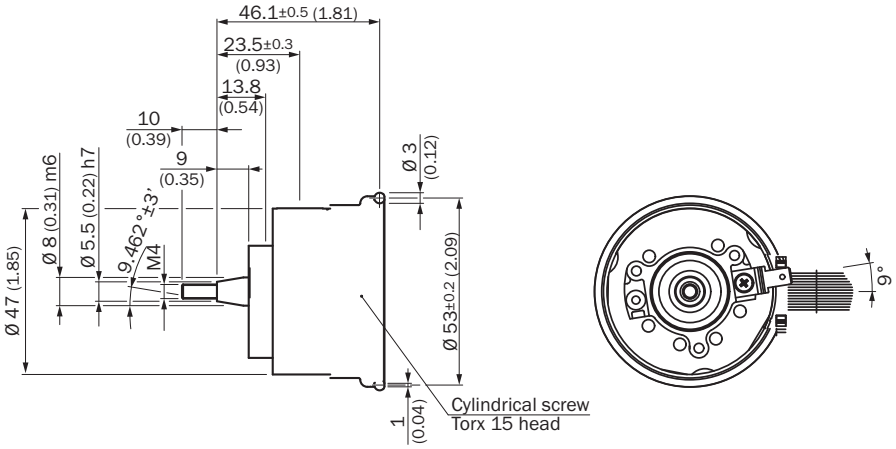

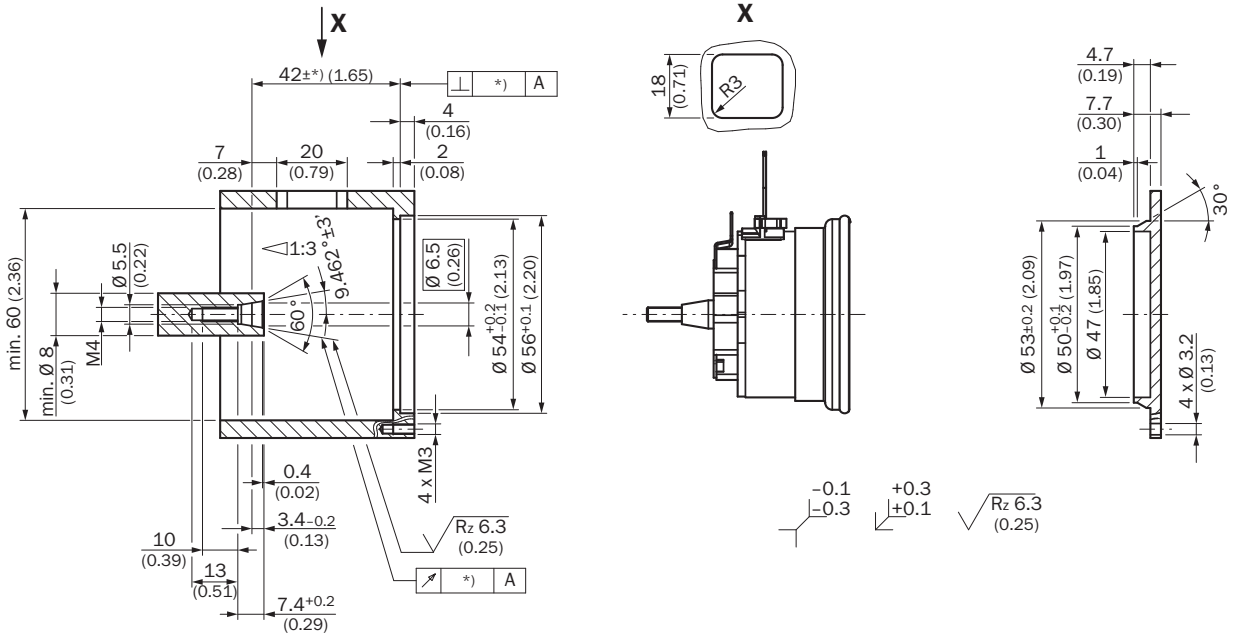

*) Size of tolerance reduce the allowed movement of the shaft, see data sheet.

Dimensions in mm (inch)

Attachment specifications

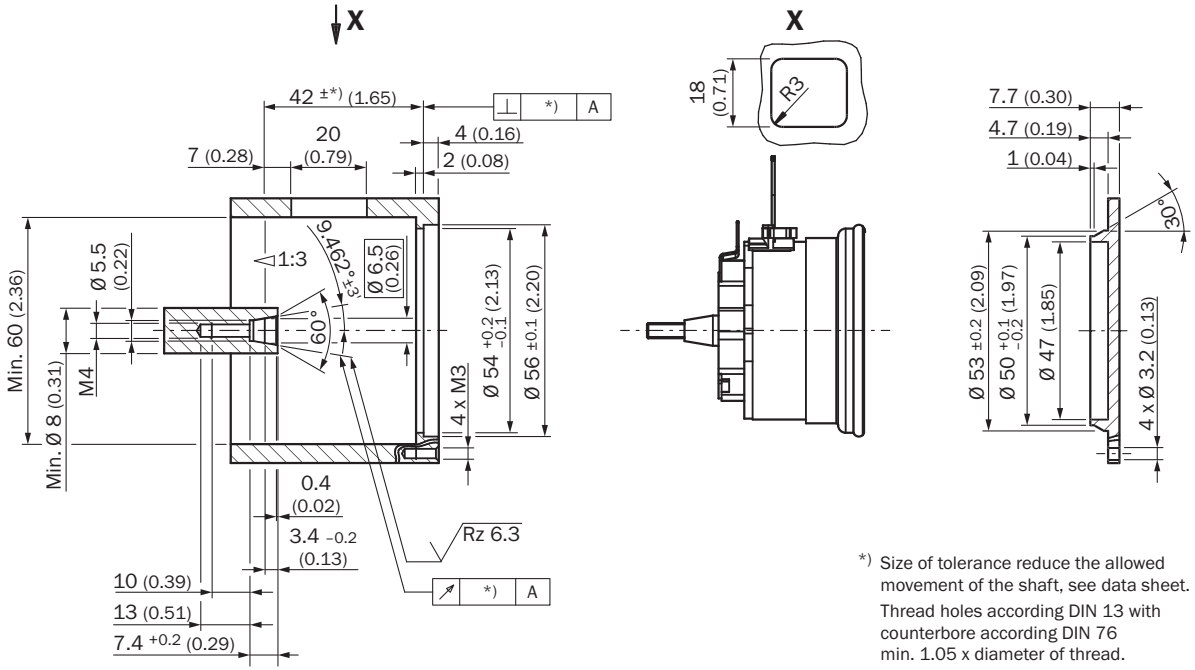

*) Size of tolerance reduce the allowed movement of the shaft, see data sheet.
Thread holes according DIN 13 with counterbore according DIN 76 min. 1.05 x diameter of thread.

PIN assignment

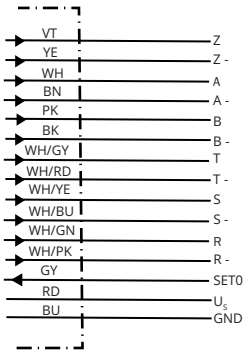

PIN assignment

PIN	Color	Signal
1	Blue	Ground connection (GND)
2	Red	Supply voltage 5 V ± 10 % (U_S)
3	Yellow	Reference signal inverted ($\overline{Z}$)
4	Purple	Reference signal (Z)
5	Brown	Increment signal inverted ($\overline{A}$)
6	White	Increment signal (A)
7	Black	Increment signal inverted ($\overline{B}$)
8	Pink	Increment signal (B)
9	White/Red	Commutation signal inverted ($\overline{T}$)
10	White/Gray	Commutation signal (T)
11	White/Blue	Commutation signal inverted ($\overline{S}$)
12	White/Yellow	Commutation signal (S)
13	White/Pink	Commutation signal inverted ($\overline{R}$)
14	White/Green	Commutation signal (R)
15	Gray	Electronic setting of the commutation signals (SET0)

Diagrams At constant speed, looking at the input shaft, and clockwise rotation

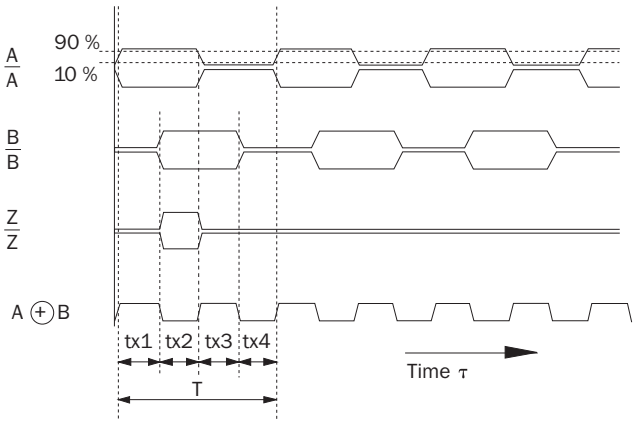

At constant rotational speed with regard to the input shaft and rotation in clockwise direction.

By connecting the two signals A and B, an output signal arises whose period durations tx1 ... tx4 have varying lengths.

The differences are determined:

- by the pulse/pause ratio tolerance of the individual channels
- by the tolerance in the 90° phase shift between A and B
- by the frequency

The times tx1 ... tx4 ideally have to amount to 1/4 of the particular period duration T. The typical output frequency of the encoder is defined so that the max. time tx is smaller than 1.5 x T/4.

Diagrams

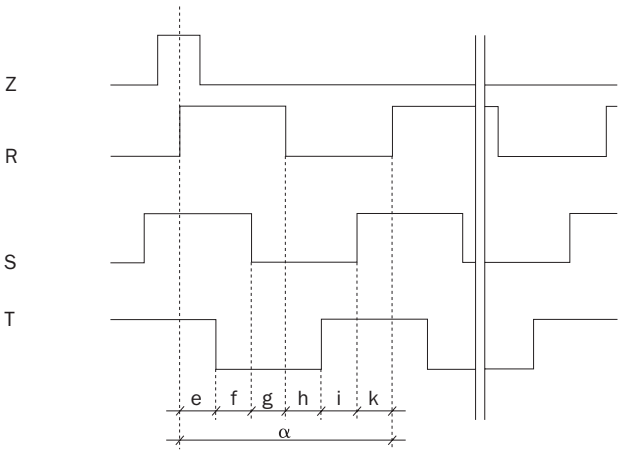

Polpairs	Number of poles	e, f, g, h, i, k	α
2	4	30°	180°
3	6	20°	120°
4	8	15°	90°
6	12	10°	60°
8	16	7.5°	45°

The angle information is related to a mechanical shaft rotation. Flank precision of the signals R, S, T ±1°.

Recommended accessories

Other models and accessories ➜ www.sick.com/CFS50

	Brief description	Type	part no.
connectors and cables			
	• **Connection type head A:** Female connector, JST, 8-pin, straight • **Connection type head B:** Male connector, M23, 17-pin, straight • **Signal type:** Incremental • **Cable:** 1 m, 8-wire • **Description:** Incremental, unshielded	DSL-2317-G01MJB7	2071332
	• **Connection type head A:** Female connector, terminal box, 8-pin, straight • **Connection type head B:** Male connector, M23, 17-pin, straight • **Signal type:** Incremental • **Cable:** 1 m, 8-wire • **Description:** Incremental, unshielded	DSL-2317-G01MJC7	2071331

SICK AT A GLANCE

SICK is one of the leading manufacturers of intelligent sensors and sensor solutions for industrial applications. A unique range of products and services creates the perfect basis for controlling processes securely and efficiently, protecting individuals from accidents and preventing damage to the environment.

We have extensive experience in a wide range of industries and understand their processes and requirements. With intelligent sensors, we can deliver exactly what our customers need. In application centers in Europe, Asia and North America, system solutions are tested and optimized in accordance with customer specifications. All this makes us a reliable supplier and development partner.

Comprehensive services complete our offering: SICK LifeTime Services provide support throughout the machine life cycle and ensure safety and productivity.

For us, that is “Sensor Intelligence.”

WORLDWIDE PRESENCE:

Contacts and other locations –www.sick.com