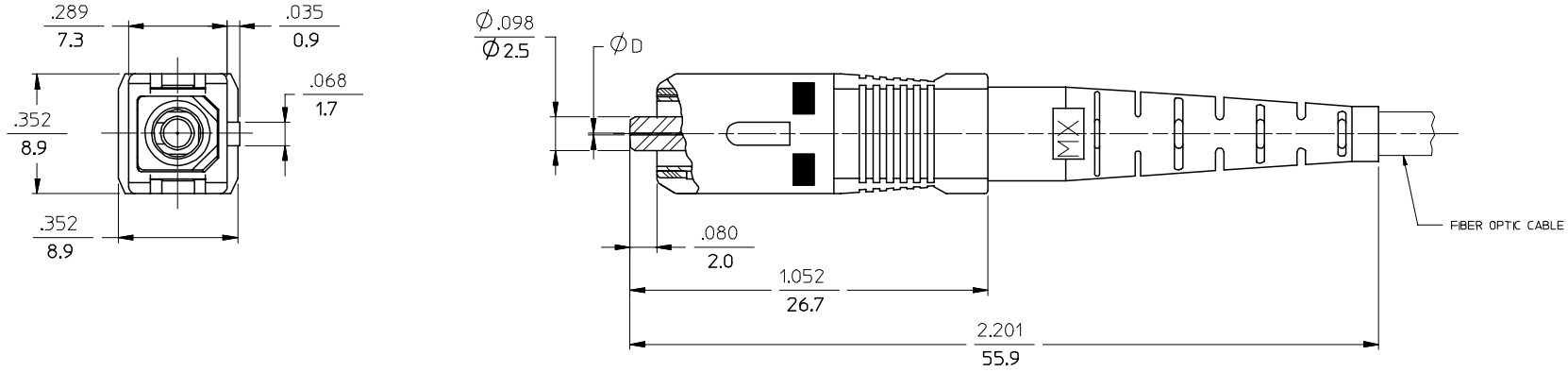

NOTES:

1. ALL DIMENSIONS ARE FOR REFERENCE ONLY.

*2. P/NS 106032-5020, 106032-0140, 106032-5310, 106032-5990 AND 106032-0910 ARE BULK PACKED IN QUANTITIES OF 100 pcs.

ENTER DESCRIPTION
EC NO: MF2007-0445 2007/01/12
DRWN:KPEVZNER 2007/01/12
CHKD: 2007/01/15
APPR: GUMIN
DESCRIPTION
REV
B1

QUALITY SYMBOLS
▼=0
▽=0

GENERAL TOLERANCES (UNLESS SPECIFIED)

	mm	INCH
4 PLACES	± ---	± ---
3 PLACES	± ---	± ---
2 PLACES	± ---	± ---
1 PLACE	± ---	± ---
ANGULAR ±1/2°		

DRAFT WHERE APPLICABLE MUST REMAIN WITHIN DIMENSIONS

DIMENSION STYLE: IN/MM
SCALE: 4:1
DESIGN UNITS: INCH
THIRD ANGLE PROJECTION

DRAWN BY: RPACIFICI DATE: 2005/12/22
CHECKED BY: DATE:
APPROVED BY: DATE:

TITLE: SC CONNECTOR (TUNABLE)

MOLEX INCORPORATED

MATERIAL NO.: SEE TABLE
DOCUMENT NO.: SD-106032-XXX0
SHEET NO.: 1 OF 3

SIZE C

THIS DRAWING CONTAINS INFORMATION THAT IS PROPRIETARY TO MOLEX INCORPORATED AND SHOULD NOT BE USED WITHOUT WRITTEN PERMISSION

CONNECTOR P/N	Ø (µm)	BOOT COLOR	HOUSING COLOR	CONNECTOR TYPE	CABLE (mm)
106032-0000	127	BLUE	BLUE	MULTIMODE	3
106032-0900					2.0 & 1.6 DUPLEX
106032-0100					1.6 SIMPLEX
106032-0050		WHITE	BEIGE		3
106032-0950					2.0 & 1.6 DUPLEX
106032-0150					1.6 SIMPLEX
106032-0060		BEIGE			3
106032-0910*					2.0 & 1.6 DUPLEX
106032-0960					
106032-0140*					1.6 SIMPLEX
106032-0160					
106032-0080		RED	RED		3
106032-0980					2.0 & 1.6 DUPLEX
106032-0180					1.6 SIMPLEX
106032-0070		BLACK	BLACK		3
106032-0970					2.0 & 1.6 DUPLEX
106032-0170					1.6 SIMPLEX
106032-2000	125.5	YELLOW	BLUE	SINGLE MODE	3
106032-2900					2.0 & 1.6 DUPLEX
106032-2100					1.6 SIMPLEX
106032-2050		WHITE			3
106032-2950					2.0 & 1.6 DUPLEX
106032-2150					1.6 SIMPLEX
106032-2080		RED	RED		3
106032-2980					2.0 & 1.6 DUPLEX
106032-2180					1.6 SIMPLEX
106032-2070		BLACK	BLACK		3
106032-2970					2.0 & 1.6 DUPLEX
106032-2170					1.6 SIMPLEX

CONNECTOR P/N	Ø (µm)	BOOT COLOR	HOUSING COLOR	CONNECTOR TYPE	CABLE (mm)
106032-3000	128	BLUE	BLUE	MULTIMODE	3
106032-3900					2.0 & 1.6 DUPLEX
106032-3100					1.6 SIMPLEX
106032-3060		BEIGE	BEIGE		3
106032-3960					2.0 & 1.6 DUPLEX
106032-3160					1.6 SIMPLEX
106032-3050		WHITE			3
106032-3950					2.0 & 1.6 DUPLEX
106032-3150					1.6 SIMPLEX
106032-3080		RED	RED		3
106032-3980					2.0 & 1.6 DUPLEX
106032-3180					1.6 SIMPLEX
106032-3070		BLACK	BLACK		3
106032-3970					2.0 & 1.6 DUPLEX
106032-3170					1.6 SIMPLEX

ENTER DESCRIPTION
EC NO: MF2007-0445 2007/01/12
DRWN: KPEVZNER 2007/01/12
CH'KD: 2007/01/15
APPR: I GUMIN
DESCRIPTION
B1
REV

QUALITY SYMBOLS
▼=0
▽=0

GENERAL TOLERANCES (UNLESS SPECIFIED)

	mm	INCH
4 PLACES	± ---	± ---
3 PLACES	± ---	± ---
2 PLACES	± ---	± ---
1 PLACE	± ---	± ---
ANGULAR ±1/2°		

DRAFT WHERE APPLICABLE MUST REMAIN WITHIN DIMENSIONS

DIMENSION STYLE: IN/MM
SCALE: 4:1
DESIGN UNITS: INCH
THIRD ANGLE PROJECTION

DRAWN BY: RPACIFICI DATE: 2005/12/22
CHECKED BY: DATE:
APPROVED BY: DATE:

TITLE: SC CONNECTOR (TUNABLE)

molex MOLEX INCORPORATED

MATERIAL NO.: SEE TABLE
DOCUMENT NO.: SD-106032-XXX0
SHEET NO.: 2 OF 3

SIZE: B

THIS DRAWING CONTAINS INFORMATION THAT IS PROPRIETARY TO MOLEX INCORPORATED AND SHOULD NOT BE USED WITHOUT WRITTEN PERMISSION

CONNECTOR P/N	⌀D (μm)	BOOT COLOR	HOUSING COLOR	CONNECTOR TYPE	CABLE (mm)
106032-4000	125	YELLOW	BLUE	SINGLE MODE	3
106032-4900					2.0 & 1.6 DUPLEX
106032-4100					1.6 SIMPLEX
106032-4050		WHITE			3
106032-4950					2.0 & 1.6 DUPLEX
106032-4150					1.6 SIMPLEX
106032-4080		RED	RED		3
106032-4980					2.0 & 1.6 DUPLEX
106032-4180					1.6 SIMPLEX
106032-4070		BLACK	BLACK		3
106032-4970					2.0 & 1.6 DUPLEX
106032-4170					1.6 SIMPLEX
106032-5000	126	YELLOW	BLUE		3
106032-5020*					
106032-5300					2.4
106032-5310*					
106032-5900					2.0 & 1.6 DUPLEX
106032-5990*					
106032-5100					1.6 SIMPLEX
106032-5050		WHITE			3
106032-5950					2.0 & 1.6 DUPLEX
106032-5150					1.6 SIMPLEX
106032-5080		RED	RED		3
106032-5980					2.0 & 1.6 DUPLEX
106032-5180					1.6 SIMPLEX
106032-5070		BLACK	BLACK		3
106032-5970					2.0 & 1.6 DUPLEX
106032-5170					1.6 SIMPLEX

CONNECTOR P/N	⌀D (μm)	BOOT COLOR	HOUSING COLOR	CONNECTOR TYPE	CABLE (mm)
106032-6000	125.5	YELLOW	BLUE	SINGLE MODE	3
106032-6900					2.0 & 1.6 DUPLEX
106032-6100					1.6 SIMPLEX
106032-7000	127				3
106032-7900					2.0 & 1.6 DUPLEX
106032-7100					1.6 SIMPLEX
106032-7050		WHITE			3
106032-7950					2.0 & 1.6 DUPLEX
106032-7150					1.6 SIMPLEX
106032-7080		RED	RED		3
106032-7980					2.0 & 1.6 DUPLEX
106032-7180					1.6 SIMPLEX
106032-7070		BLACK	BLACK		3
106032-7970					2.0 & 1.6 DUPLEX
106032-7170					1.6 SIMPLEX

ENTER DESCRIPTION
EC NO: MF2007-0445 2007/01/12
DRWN:KPEVZNER 2007/01/12
CH'KD: 2007/01/15
APPR: I GUMIN
DESCRIPTION
B1
REV

QUALITY SYMBOLS
▼=0
▽=0

GENERAL TOLERANCES (UNLESS SPECIFIED)

	mm	INCH
4 PLACES	± ---	± ---
3 PLACES	± ---	± ---
2 PLACES	± ---	± ---
1 PLACE	± ---	± ---
ANGULAR ±1/2°		

DRAFT WHERE APPLICABLE MUST REMAIN WITHIN DIMENSIONS

DIMENSION STYLE: IN/MM
SCALE: 4:1
DESIGN UNITS: INCH
THIRD ANGLE PROJECTION

DRAWN BY: RPACIFICI DATE: 2005/12/22
CHECKED BY: DATE:
APPROVED BY: DATE:

TITLE: SC CONNECTOR (TUNABLE)

molex MOLEX INCORPORATED

MATERIAL NO.: SEE TABLE
DOCUMENT NO.: SD-106032-XXX0
SHEET NO.: 3 OF 03

SIZE: B

THIS DRAWING CONTAINS INFORMATION THAT IS PROPRIETARY TO MOLEX INCORPORATED AND SHOULD NOT BE USED WITHOUT WRITTEN PERMISSION