DO NOT SCALE | DIMENSIONS IN mm | METRIC | THIRD ANGLE PROJECTION

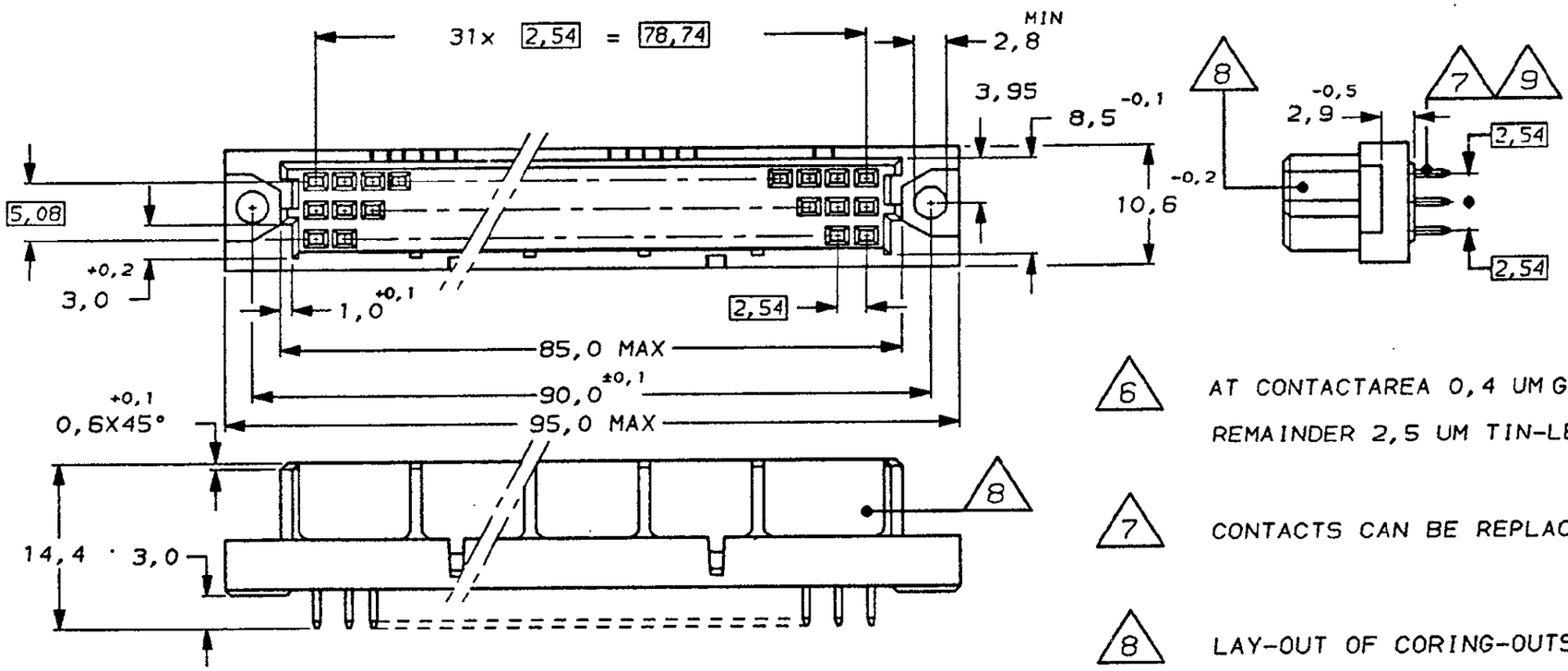

△6 AT CONTACTAREA 0,4 UM GOLD OVER 1,25 UM NICKEL.
REMAINDER 2,5 UM TIN-LEAD (93/7).

△7 CONTACTS CAN BE REPLACED AFTER ASSEMBLING.

△8 LAY-OUT OF CORING-OUTS OPTIONAL.

△9 B.T.B. POST SUITABLE. FOR 1,0 ±0,1 MM. DIA HOLE
P.C.B. THICKNESS 1,6 MM.

△10 OBSOLETE PARTS: OBSOLETE CIS STREAMLINING PER D.RENAUD/D.SINISI

NOTES:

1 CONNECTOR MEETS THE REQUIREMENTS
ACC. DIN 41612 AND IEC 603-2 SPECIFICATION.

△2 MATERIAL CONTACT: PHOSPHORBRONZE.
MATERIAL COVER: GLASSFILLED 30% THERM. POLYESTER.
COLOR GREY ACC: RAL 7032.

△3 AT CONTACTAREA 1,25 UM GOLD OVER 1,25 UM NICKEL.
REMAINDER 2,5 UM TIN-LEAD (93/7).

△4 AT CONTACTAREA 0,8 UM GOLD OVER 1,25 UM NICKEL.
REMAINDER 2,5 UM TIN-LEAD (93/7).

△5 AT CONTACTAREA 2,0 UM GOLD OVER 1,25 UM NICKEL.
REMAINDER 2,5 UM TIN-LEAD (93/7).

△10 OBSOLETE	△6		-8
	△5		-7
	△4		-4
	△3 FINISH	△2 MATERIAL	166 584 - 1 PART NUMBER

CUSTOMER DWG for REFERENCE ONLY

ISS	REVISION RECORD	ECN	DR/CHK	DATE
B2	REV PER ECO-10-000444		KK/AEG	08JAN10
B1	REDRAWN BY EC: LB-	0681/94	E.LOPES	13.DEC.94

THIS DRAWING IS UNPUBLISHED RELEASED FOR PUBLICATION 19
© COPYRIGHT 19 BY AMP DO BRASIL LTDA S.P. ALL INTERNATIONAL RIGHTS RESERVED AMP PRODUCTS MAY BE COVERED BY U.S. AND FOREIGN PATENTS AND/OR PATENTS PENDING.

TOLERANCES UNLESS OTHERWISE STATED
DEC. ± 0,3
ANGLES ± 1°

INS. DIA. RANGE —— " ——
WIRE RANGE —— " ——
SCALE —— " ——

DR. E.LOPES 13.DEC.94
CHK. M.RUSSO 13DEC94
DE
APP M.E.DINIZ 14/DEC/94

AMP do BRASIL LTDA.
São Paulo , Brasil

DESCRIPTION
96 POS FEMALE CONN..ASS'Y
WITH B.T.B., CONTACTS.

A3 | DWG NO C-166584. | SHEET 1 or 1

8 7 6 5 4 3 2 1