Data sheet



# C4P-EA07531D00

deTec

SAFETY LIGHT CURTAINS

SICK
Sensor Intelligence.



Illustration may differ

## Ordering information

| Type | part no. |
|---|---|
| C4P-EA07531D00 | 1220153 |

Other models and accessories ➜ www.sick.com/deTec

## Detailed technical data

### Features

| | |
|---|---|
| **Product version** | deTec4 |
| **Application** | Normal industrial environment |
| **System part** | Receiver |
| **Resolution** | 30 mm |
| **Scanning range** | 30 m |
| **Protective field height** | 750 mm |
| **Response time** | 11 ms (Uncoded)<br>16 ms (code 1 or code 2) |
| **Synchronization** | Optical synchronization |
| **End cap with integrated LED** | ✓ |
| **Items supplied** | Receiver<br>Test rod with diameter corresponding to the resolution of the safety light curtain<br>Safety instruction<br>Mounting instructions<br>Operating instructions for download |

### Safety-related parameters

| | |
|---|---|
| **Type** | Type 4 (IEC 61496-1) |
| **Safety integrity level** | SIL 3 (IEC 61508) |
| **Category** | Category 4 (ISO 13849-1) |
| **Performance level** | PL e (ISO 13849-1) |
| **$PFH_D$ (mean probability of a dangerous failure per hour)** | |
| Single device | $15.3 \times 10^{-9}$ |
| Cascade with one guest | $30.5 \times 10^{-9}$ |
| Cascade with two guest devices | $45.6 \times 10^{-9}$ |

| | |
|---|---|
| **$T_M$ (mission time)** | 20 years (ISO 13849-1) |
| **Safe state in the event of a fault** | At least one OSSD is in the OFF state. |

## Functions

| | |
|---|---|
| **Protective operation** | ✓ |
| **Automatic calibration of the protective field width** | ✓ |
| **Beam coding** | ✓ |
| **Restart interlock** | ✓ |
| **External device monitoring (EDM)** | ✓ |
| **Cascading** | ✓ |
| **Smart presence detection** | ✓ |
| **Reduced resolution** | ✓ |
| **Dynamic protective field width during operation** | ✓ |
| **Differentiation between person and material** | |
| 2-signal muting | ✓ |

## Interfaces

| | |
|---|---|
| **System connection** | Depending on system plug (M12 male connector, 5-pin or 8-pin) |
| **Extension connection** | Depending on system plug (without extension connection or with M12 female connector, 5-pin) |
| **Configuration method** | DIP switch on system plug |
| **Display elements** | LEDs |
| **Display of the synchronization status of the upper and lower beams** | ✓ |
| **Top LED** | ✓ |
| **Application diagnostic output (ADO)** | ✓ |
| **IO-Link** | ✓ |
| **Near Field Communication (NFC)** | ✓ |

## Electronics

| | |
|---|---|
| **Protection class** | III (IEC 61140) |
| **Supply voltage $V_S$** | 24 V DC (19.2 V ... 28.8 V) |
| **Ripple** | ≤ 10 % |
| **Power consumption typical** | 3.43 W (DC) |
| **Output signal switching devices (OSSDs)** | |
| Type of output | 2 PNP semiconductors, short-circuit protected, cross-circuit monitored [1)] |
| ON state, switching voltage HIGH | 24 V DC ($V_S$ – 2.25 V DC ... $V_S$) |
| OFF state, switching voltage LOW | ≤ 2 V DC |
| Current-carrying capacity per OSSD | ≤ 500 mA |
| **Application diagnostic output (ADO)** | |
| Type of output | PNP semiconductor, short-circuit protected [1)] |
| Output voltage HIGH (active) | ≥ $V_s$ – 3 V |

[1)] Applies to the voltage range between –30 V and +30 V.

| | |
|---|---|
| Output voltage LOW (deactivated) | High resistance |
| Output current HIGH (active) | ≤ 100 mA |

[1] Applies to the voltage range between –30 V and +30 V.

## Mechanics

| | |
|---|---|
| **Dimensions** | See dimensional drawing |
| **Housing material** | Aluminum extruded profile |

## Ambient data

| | |
|---|---|
| **Enclosure rating** | IP65 (IEC 60529)<br>IP67 (IEC 60529) |
| **Ambient operating temperature** | –30 °C ... +55 °C |
| **Storage temperature** | –30 °C ... +70 °C |
| **Air humidity** | 15 % ... 95 %, Non-condensing |
| **Vibration resistance** | 5 ... 150 Hz, 3,5 mm / 1 g (EN 60068-2-6) |
| **Shock resistance** | 15 g / 6 ms (EN 60068-2-27) |
| **Class** | 3M4 (IEC TR 60721-4-3) |

## Certificates

| | |
|---|---|
| **EU declaration of conformity** | ✓ |
| **UK declaration of conformity** | ✓ |
| **ACMA declaration of conformity** | ✓ |
| **Moroccan declaration of conformity** | ✓ |
| **China-RoHS** | ✓ |
| **UK-Type-Examination approval** | ✓ |
| **S Mark certificate** | ✓ |
| **ULus approval** | ✓ |
| **cUL approval** | ✓ |
| **Taiwan OSHA certificate** | ✓ |
| **Japan Press Safety certificate** | ✓ |
| **EC-Type-Examination approval** | ✓ |
| **China GB/T certificate** | ✓ |

## Classifications

| | |
|---|---|
| **ECLASS 5.0** | 27272704 |
| **ECLASS 5.1.4** | 27272704 |
| **ECLASS 6.0** | 27272704 |
| **ECLASS 6.2** | 27272704 |
| **ECLASS 7.0** | 27272704 |
| **ECLASS 8.0** | 27272704 |
| **ECLASS 8.1** | 27272704 |
| **ECLASS 9.0** | 27272704 |
| **ECLASS 10.0** | 27272704 |
| **ECLASS 11.0** | 27272704 |

| | |
|---|---|
| **ECLASS 12.0** | 27272704 |
| **ETIM 5.0** | EC002549 |
| **ETIM 6.0** | EC002549 |
| **ETIM 7.0** | EC002549 |
| **ETIM 8.0** | EC002549 |
| **UNSPSC 16.0901** | 46171620 |

## Dimensional drawing

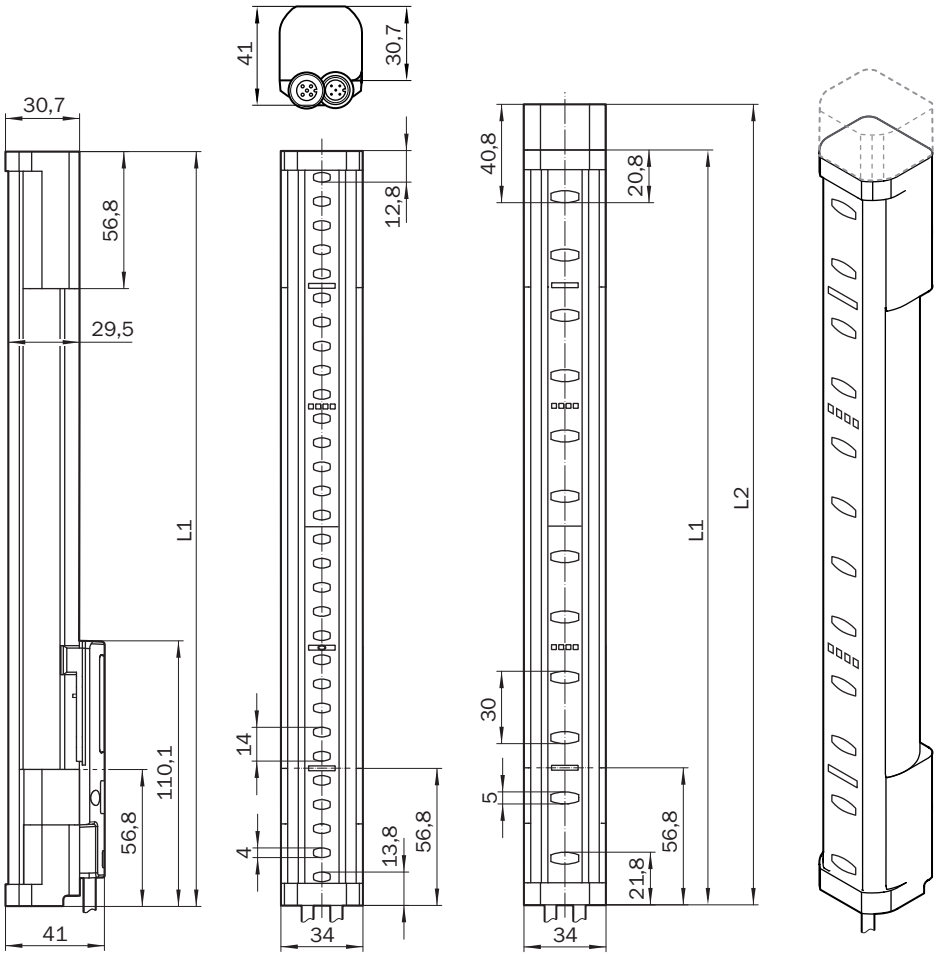


Dimensions in mm (inch)

| Protective field height | L1 | L2 |
|---|---|---|
| 300 (11.81) | 313 (12.32) | 332 (13.07) |
| 450 (17.72) | 463 (18.23) | 482 (18.98) |
| 600 (23.62) | 613 (24.13) | 632 (24.88) |
| 750 (29.53) | 763 (30.04) | 782 (30.79) |
| 900 (35.43) | 913 (35.94) | 932 (36.69) |
| 1,050 (41.34) | 1,063 (41.85) | 1,082 (42.6) |
| 1,200 (47.24) | 1,213 (47.75) | 1,232 (48.5) |
| 1,350 (53.15) | 1,362 (53.62) | 1,381 (54.37) |

| Protective field height | L1 | L2 |
|---|---|---|
| 1,500 (59.06) | 1,512 (59.53) | 1,531 (60.28) |
| 1,650 (64.96) | 1,662 (65.43) | 1,681 (66.18) |
| 1,800 (70.87) | 1,812 (71.34) | 1,831 (72.09) |
| 1,950 (76.77) | 1,962 (77.24) | 1,981 (77.99) |
| 2,100 (82.68) | 2,112 (83.15) | 2,131 (83.9) |

## Connection diagram deTec4 / deTem4 on DMM4, muting, reset, override, operating mode selection

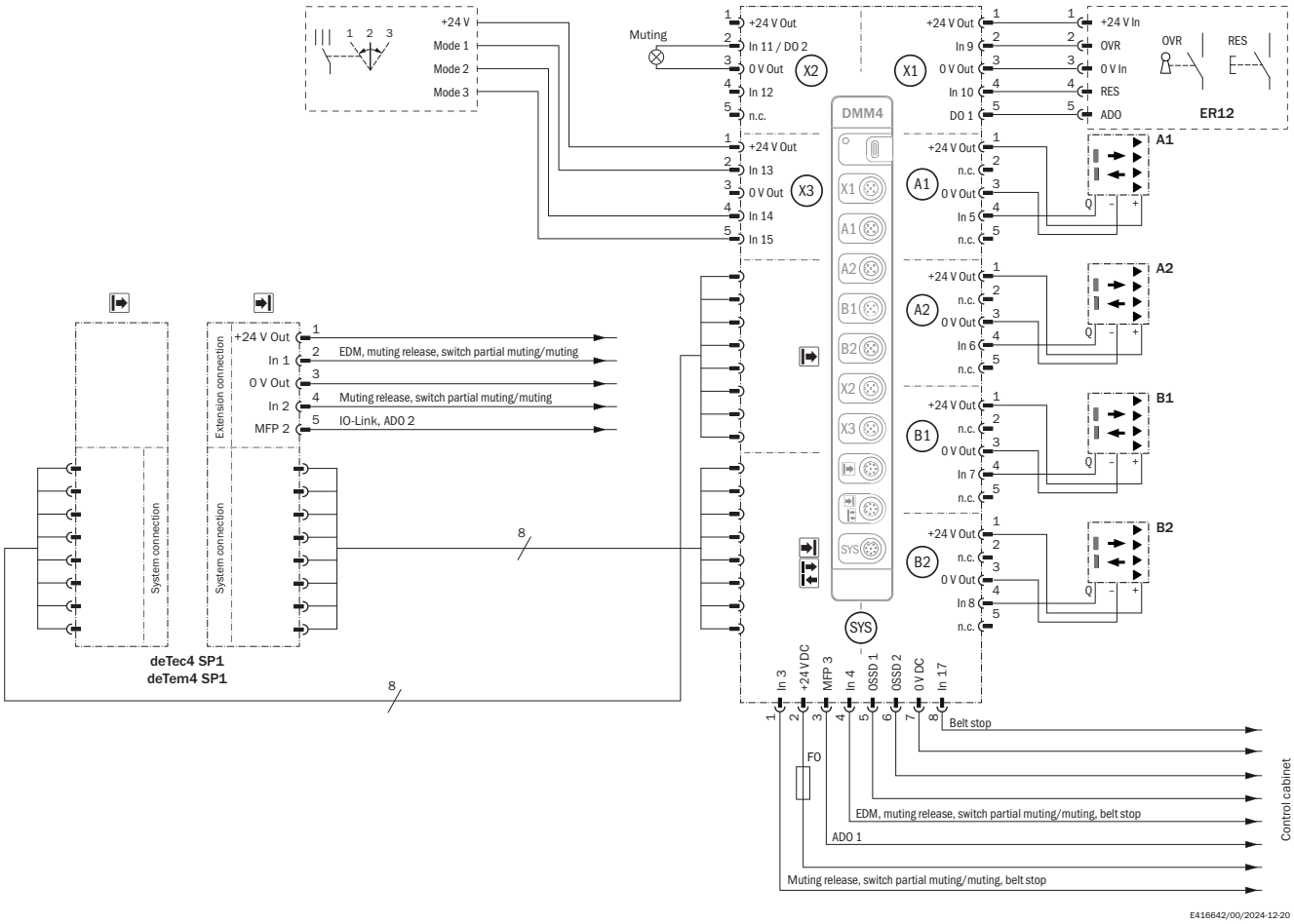


The requirements in the operating instructions of the devices used must be adhered to.

## Connection diagram deTec4 / deTem4 on DMM4, connection example, muting, reset, override, SDI

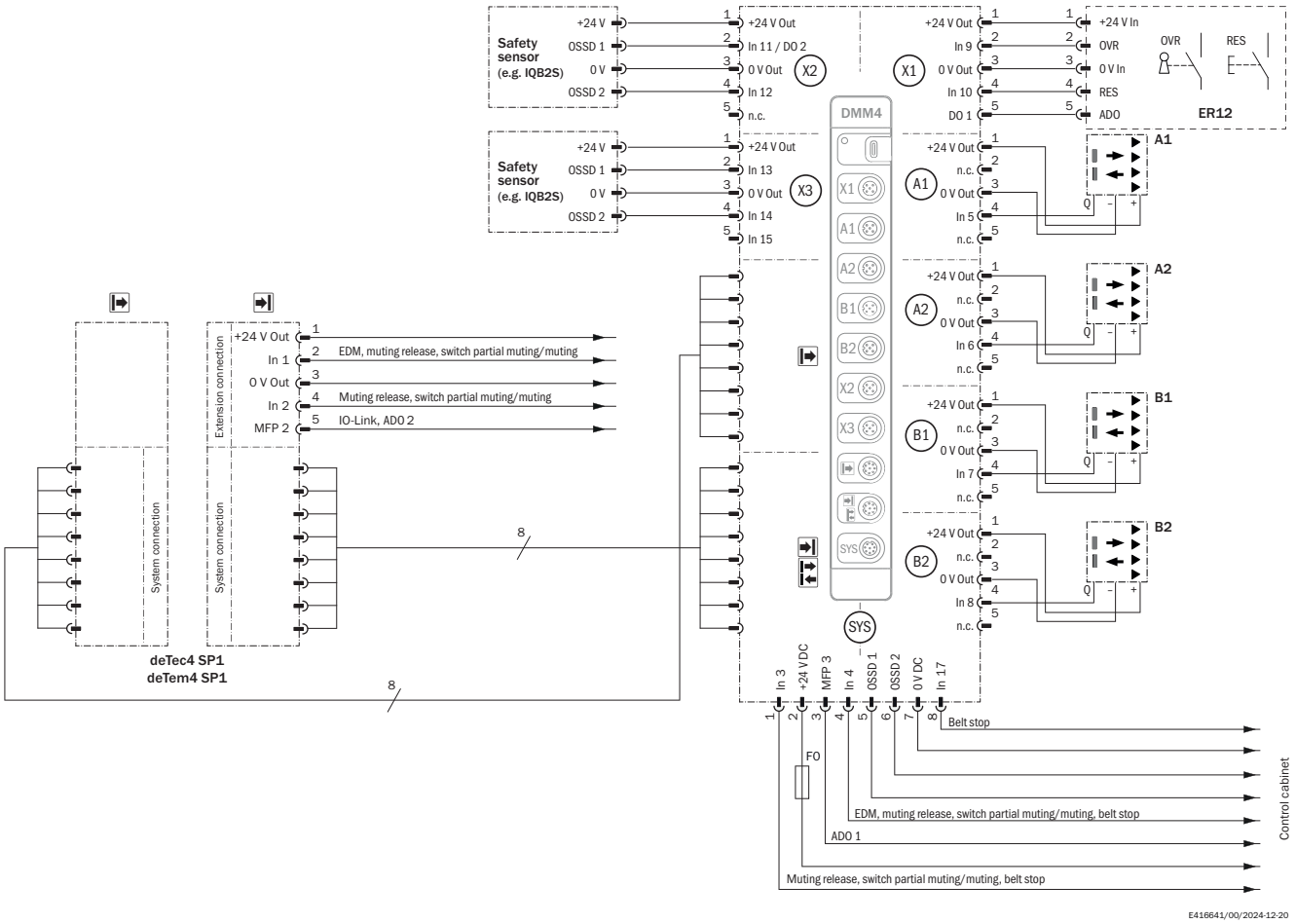


The requirements in the operating instructions of the devices used must be adhered to.

## Recommended accessories

Other models and accessories ➜ www.sick.com/deTec

| | Brief description | Type | part no. |
|---|---|---|---|
| **Safety relays** | | | |
|  | • **Applications:** Output expansion module for OSSDs<br>• **Compatible sensor types:** Safety sensors with OSSDs<br>• **Connection type:** Front connector with spring terminals<br>• **Restart interlock:** no<br>• **External device monitoring (EDM):** Via path<br>• **Outputs:** 2 enabling current paths (safe), 1 feedback current path (for use as external device monitoring, not safe)<br>• **Housing width:** 18 mm | RLY3-OSSD100 | 1085343 |
|  | • **Applications:** Output expansion module for OSSDs<br>• **Compatible sensor types:** Safety sensors with OSSDs<br>• **Connection type:** Front connector with spring terminals<br>• **Restart interlock:** no<br>• **External device monitoring (EDM):** Via path<br>• **Outputs:** 4 enabling current paths (safe), 1 feedback current path (for use as external device monitoring, not safe), 1 signaling current path (not safe)<br>• **Housing width:** 28 mm | RLY3-OSSD400 | 1099971 |
| **Mounting systems** | | | |
| 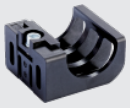 | • **Description:** FlexFix bracket for 2 devices (e.g. sender and receiver), can be aligned ± 15°, including M5 screw<br>• **Material:** Plastic<br>• **Details:** Plastic<br>• **Packing unit:** 4 pieces | BEF-1SHABPKU4 | 2066614 |
|  | • **Description:** QuickFix bracket for 2 devices (e.g. sender and receiver)<br>• **Material:** Plastic<br>• **Details:** Plastic<br>• **Packing unit:** 4 pieces | BEF-3SHABPKU4 | 2098710 |
| 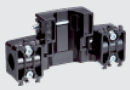 | • **Description:** Muting arm bracket for deTec safety light curtain or deTem safety multibeam sensor<br>• **Packing unit:** 1 piece<br>• **Suitable for:** deTec, deTem | Muting arm bracket | 2106455 |
|  | • **Description:** Sensor bracket G6 and P250 | BEF-2KHAAAKU1 | 2113145 |
|  | • **Description:** Muting arm, short<br>• **Suitable for:** deTec, deTem | Muting arm, short | 2111924 |
|  | • **Description:** Muting arm, long<br>• **Suitable for:** deTec, deTem | Muting arm, long | 2111923 |
|  | • **Description:** Universal holder for round steel arms and muting arms, for mounting sensors or reflectors | BEF-KHS-N01 | 2044953 |

| | Brief description | Type | part no. |
|---|---|---|---|
| connectors and cables | | | |
|  | • **Connection type head A:** Female connector, M12, 5-pin, A-coded<br>• **Connection type head B:** Female connector, M12, 5-pin, A-coded<br>• **Connection type head C:** Male connector, M12, 5-pin, A-coded<br>• **Description:** Unshielded | DSC-1205T000025KM0 | 6030664 |
|  | • **Connection type head A:** Female connector, M12, 8-pin, A-coded<br>• **Connection type head B:** Female connector, M12, 8-pin, A-coded<br>• **Connection type head C:** Male connector, M12, 8-pin, A-coded<br>• **Description:** Unshielded | DSC-1208T000025KM0 | 6058647 |
|  | • **Connection type head A:** Female connector, M12, 5-pin, straight, A-coded<br>• **Connection type head B:** Flying leads<br>• **Signal type:** Sensor/actuator cable<br>• **Cable:** 2 m, 5-wire, PUR, halogen-free<br>• **Description:** Sensor/actuator cable, unshielded<br>• **Application:** Uncontaminated zones, Zones with oils and lubricants, Robot, Drag chain operation | YF2A15-020UB5XLEAX | 2095617 |
|  | • **Connection type head A:** Female connector, M12, 5-pin, straight, A-coded<br>• **Connection type head B:** Flying leads<br>• **Signal type:** Sensor/actuator cable<br>• **Cable:** 5 m, 5-wire, PUR, halogen-free<br>• **Description:** Sensor/actuator cable, unshielded<br>• **Application:** Uncontaminated zones, Zones with oils and lubricants, Robot, Drag chain operation | YF2A15-050UB5XLEAX | 2095618 |
|  | • **Connection type head A:** Female connector, M12, 5-pin, straight, A-coded<br>• **Connection type head B:** Flying leads<br>• **Signal type:** Sensor/actuator cable<br>• **Cable:** 10 m, 5-wire, PUR, halogen-free<br>• **Description:** Sensor/actuator cable, unshielded<br>• **Application:** Uncontaminated zones, Zones with oils and lubricants, Robot, Drag chain operation | YF2A15-100UB5XLEAX | 2095619 |
|  | • **Connection type head A:** Female connector, M12, 8-pin, straight, A-coded<br>• **Connection type head B:** Flying leads<br>• **Signal type:** Sensor/actuator cable<br>• **Cable:** 5 m, 8-wire, PUR, halogen-free<br>• **Description:** Sensor/actuator cable, unshielded<br>• **Application:** Uncontaminated zones, Zones with oils and lubricants, Robot, Drag chain operation | YF2A18-050UA5XLEAX | 2095653 |
|  | • **Connection type head A:** Female connector, M12, 8-pin, straight, A-coded<br>• **Connection type head B:** Flying leads<br>• **Signal type:** Sensor/actuator cable<br>• **Cable:** 10 m, 8-wire, PUR, halogen-free<br>• **Description:** Sensor/actuator cable, unshielded<br>• **Application:** Uncontaminated zones, Zones with oils and lubricants, Robot, Drag chain operation | YF2A18-100UA5XLEAX | 2095654 |
|  | • **Connection type head A:** Female connector, M12, 5-pin, straight, A-coded<br>• **Connection type head B:** Male connector, M12, 5-pin, straight, A-coded<br>• **Signal type:** Sensor/actuator cable<br>• **Cable:** 2 m, 5-wire, PUR, halogen-free<br>• **Description:** Sensor/actuator cable, unshielded<br>• **Application:** Uncontaminated zones, Zones with oils and lubricants, Robot, Drag chain operation | YF2A15-020UB5M2A15 | 2096009 |
|  | • **Connection type head A:** Female connector, M12, 5-pin, straight, A-coded<br>• **Connection type head B:** Male connector, M12, 5-pin, straight, A-coded<br>• **Signal type:** Sensor/actuator cable<br>• **Cable:** 5 m, 5-wire, PUR, halogen-free<br>• **Description:** Sensor/actuator cable, unshielded<br>• **Application:** Uncontaminated zones, Zones with oils and lubricants, Robot, Drag chain operation | YF2A15-050UB5M2A15 | 2096010 |
|  | • **Connection type head A:** Female connector, M12, 5-pin, straight, A-coded<br>• **Connection type head B:** Male connector, M12, 5-pin, straight, A-coded<br>• **Signal type:** Sensor/actuator cable<br>• **Cable:** 10 m, 5-wire, PUR, halogen-free<br>• **Description:** Sensor/actuator cable, unshielded<br>• **Application:** Uncontaminated zones, Zones with oils and lubricants, Robot, Drag chain operation | YF2A15-100UB5M2A15 | 2096011 |
|  | • **Connection type head A:** Female connector, M12, 8-pin, straight, A-coded<br>• **Connection type head B:** Male connector, M12, 8-pin, straight, A-coded<br>• **Signal type:** Sensor/actuator cable<br>• **Cable:** 2 m, 8-wire, PUR, halogen-free<br>• **Description:** Sensor/actuator cable, unshielded<br>• **Application:** Uncontaminated zones, Zones with oils and lubricants, Robot, Drag chain operation | YF2A18-020UA5M2A18 | 2096033 |
|  | • **Connection type head A:** Female connector, M12, 8-pin, straight, A-coded<br>• **Connection type head B:** Male connector, M12, 8-pin, straight, A-coded<br>• **Signal type:** Sensor/actuator cable<br>• **Cable:** 5 m, 8-wire, PUR, halogen-free | YF2A18-050UA5M2A18 | 2096034 |

| | Brief description | Type | part no. |
|---|---|---|---|
| | • **Description:** Sensor/actuator cable, unshielded<br>• **Application:** Uncontaminated zones, Zones with oils and lubricants, Robot, Drag chain operation | | |
|  | • **Connection type head A:** Female connector, M12, 8-pin, straight, A-coded<br>• **Connection type head B:** Male connector, M12, 8-pin, straight, A-coded<br>• **Signal type:** Sensor/actuator cable<br>• **Cable:** 10 m, 8-wire, PUR, halogen-free<br>• **Description:** Sensor/actuator cable, unshielded<br>• **Application:** Uncontaminated zones, Zones with oils and lubricants, Robot, Drag chain operation | YF2A18-100UA5M2A18 | 2096035 |
|  | | Muting connector | 2092758 |
|  | | IO-Link connector | 2092757 |
|  | • **Connection type head A:** Female connector, M12, 8-pin, straight, A-coded<br>• **Connection type head B:** Flying leads<br>• **Signal type:** Sensor/actuator cable<br>• **Cable:** 2 m, 8-wire, PUR, halogen-free<br>• **Description:** Sensor/actuator cable, unshielded<br>• **Application:** Uncontaminated zones, Zones with oils and lubricants, Robot, Drag chain operation | YF2A18-020UA5XLEAX | 2095652 |
| system plugs and extension modules | | | |
|  | • **Function range:** SP1<br>• **System connection:** Plug, M12, 5-pin<br>• **Extension connection:** Without extension connection | SP1-1000 | 2076832 |
|  | • **Function range:** SP1<br>• **System connection:** Plug, M12, 5-pin<br>• **Extension connection:** Female connector M12, 5-pin | SP1-1100 | 2076833 |
|  | • **Function range:** SP1<br>• **System connection:** Male connector M12, 8-pin<br>• **Extension connection:** Without extension connection | SP1-1200 | 2076834 |
|  | • **Function range:** SP1<br>• **System connection:** Male connector M12, 8-pin<br>• **Extension connection:** Female connector M12, 5-pin | SP1-1300 | 2076835 |
|  | • **Function range:** SP2<br>• **System connection:** Plug, M12, 5-pin<br>• **Extension connection:** Without extension connection | SP2-2000 | 2093097 |
|  | • **Function range:** SP2<br>• **System connection:** Plug, M12, 5-pin<br>• **Extension connection:** Female connector M12, 5-pin | SP2-2100 | 2093098 |
|  | • **Function range:** SP2<br>• **System connection:** Male connector M12, 8-pin<br>• **Extension connection:** Without extension connection | SP2-2200 | 2093099 |
|  | • **Function range:** SP2<br>• **System connection:** Male connector M12, 8-pin<br>• **Extension connection:** Female connector M12, 5-pin | SP2-2300 | 2093100 |

| | Brief description | Type | part no. |
|---|---|---|---|
| network devices | | | |
|  | | IOLA2US-01101<br>(SiLink2 Master) | 1061790 |
|  | | SIG200-0A0G12200 | 1102605 |
|  | | SIG200-0A0412200 | 1089794 |
|  | | SIG200-0A0512200 | 1089796 |

| | Brief description | Type | part no. |
|---|---|---|---|
| Photoelectric sensors | | | |
|  | • **Sensing range max.:** 5 mm ... 500 mm<br>• **Functional principle:** Photoelectric proximity sensor<br>• **Connection type:** Cable with M12 male connector, 4-pin, 300 mm<br>• **Type of light:** Infrared light<br>• **Adjustment:** Potentiometer<br>• **Housing:** Rectangular | GTB6-P7441S56 | 1077541 |
|  | • **Sensing range max.:** 0.15 m ... 12 m0.15 m ... 10 m<br>• **Functional principle:** Photoelectric retro-reflective sensor<br>• **Functional principle detail:** With minimum distance to reflector (dual lens system)<br>• **Switching output:** PNP<br>• **Switching mode:** Light/dark switching<br>• **Connection type:** Male connector M12, 4-pin<br>• **Light source:** PinPoint LED<br>• **Adjustment:** None | GL10-P4151 | 1069860 |
|  | • **Sensing range max.:** 0.03 m ... 6 m<br>• **Functional principle:** Photoelectric retro-reflective sensor<br>• **Connection type:** Cable with M12 male connector, 4-pin<br>• **Type of light:** Visible red light<br>• **Adjustment:** Potentiometer<br>• **Housing:** Rectangular | GL6-P0211S49 | 1070568 |
|  | • **Sensing range max.:** 20 mm ... 950 mm<br>• **Functional principle:** Photoelectric proximity sensor<br>• **Functional principle detail:** Background suppression<br>• **Switching output:** PNP<br>• **Switching mode:** Light switching<br>• **Connection type:** Male connector M12, 4-pin<br>• **Light source:** PinPoint LED<br>• **Adjustment:** Potentiometer | GTB10-P4411S01 | 1066852 |
| reflectors and optics | | | |
|  | • **Description:** Rectangular, screw connection<br>• **Dimensions:** 51 mm 61 mm<br>• **Ambient operating temperature:** –30 °C ... +65 °C | P250 | 5304812 |

# SICK AT A GLANCE

SICK is one of the leading manufacturers of intelligent sensors and sensor solutions for industrial applications. A unique range of products and services creates the perfect basis for controlling processes securely and efficiently, protecting individuals from accidents and preventing damage to the environment.

We have extensive experience in a wide range of industries and understand their processes and requirements. With intelligent sensors, we can deliver exactly what our customers need. In application centers in Europe, Asia and North America, system solutions are tested and optimized in accordance with customer specifications. All this makes us a reliable supplier and development partner.

Comprehensive services complete our offering: SICK LifeTime Services provide support throughout the machine life cycle and ensure safety and productivity.

**For us, that is “Sensor Intelligence.”**

# WORLDWIDE PRESENCE:

Contacts and other locations –www.sick.com