ES-FT-BPC-B 16-25 OG - Connector

1130816

https://www.phoenixcontact.com/us/products/1130816

Please be informed that the data shown in this PDF document is generated from our online catalog. Please find the complete data in the user documentation. Our general terms of use for downloads are valid.



Connector, Range of articles: BPC, color: orange, number of positions: 1, rated voltage: 1500, rated current: 120 A, Connection method: Screw connection

Your advantages

- Mismatching and short circuit proof
- Touch-proof
- Foolproof mechanism installed
- Safety lock
- 360° free rotation and flexible wiring
- Patented design, with 3 proofs and one rotation

Commercial data

Item number	1130816
Packing unit	15 pc
Minimum order quantity	1 pc
Sales key	AB04
Product key	ABLDBA
GTIN	4063151058869
Weight per piece (including packing)	35.07 g
Weight per piece (excluding packing)	35.07 g
Customs tariff number	85359000
Country of origin	CN

Technical data

Notes

Safety note

Safety note	• WARNING: Commission properly functioning products only. The products must be regularly inspected for damage. Decommission defective products immediately. Replace damaged products. Repairs are not possible.
	• WARNING: Only electrically qualified personnel may install and operate the product. They must observe the following safety notes. The qualified personnel must be familiar with the basics of electrical engineering. They must be able to recognize and prevent danger. The relevant symbol on the packaging indicates that only personnel familiar with electrical engineering are allowed to install and operate the product.
	WARNING: The connectors may not be plugged in or disconnected under load. Ignoring the warning or improper use may damage persons and/or property.
	• The products are suitable for applications in plant, controller, and electrical device engineering.
	• Assembled products may not be manipulated or improperly opened.
	• Only use mating connectors that are specified in the technical data of the standards listed (e.g. the ones listed in the product accessories online at phoenixcontact.com/products).
	• When using the product in direct connection with third-party manufacturers, the user is responsible.
	• For operating voltages > 50 V AC, conductive connector housings must be grounded
	• Ensure that the protective or functional ground has been properly connected.
	• Observe the corresponding technical data. You will find information: o On the product o On the packing label o In the supplied documentation o Online at phoenixcontact.com/products under the product
	• The installation notes/Design In documents online on the download page at phoenixcontact.com/products must be observed for this product.
	• Use a protective cap to protect connectors that are not in use. The suitable accessories are available online in the accessory section of the product at phoenixcontact.com/products
	• The connector warms up in normal operation. Depending on the ambient conditions, the surface of the connector can continue to warm up. In this case, the user is responsible for posting warnings (e.g. DIN EN ISO 13732-1:2008-12).
	• Operate the connector only when it is fully plugged in and interlocked.
	• Ensure that when laying the cable, the tensile load on the connectors does not exceed the upper limit specified in the standards.

	• Observe the minimum bending radius of the cable. Lay the cable without twisting it.

Product properties

Product type	Connectors for energy storage
Product family	BPC
Number of positions	1

Insulation characteristics

Degree of pollution	2

Electrical properties

Rated voltage (III/2)	1500 V DC
Nominal voltage ATD	1500 (III/2.00) in accordance with IEC 61984
	1000 in accordance with UL 4128
Rated current	120 A (with 25 mm² conductor cross-section, in accordance with IEC 61984)
	76 A (with 16 mm² conductor cross-section, in accordance with IEC 61984)
	120 A (with AWG 4, in accordance with UL 4128)
Contact resistance	≤ 5 mΩ
Nominal voltage U_N	1000 V (in accordance with UL 4128)

Connection data

Connection method	Screw connection
Tightening torque	0.6 ... 0.6 Nm

Material specifications

Color	orange
Material	Polyamide (Housing)
	Copper (Contact)
	Silicon (Seal)
Flammability rating according to UL 94	V0

Cable/line

Cable pull-out force	≥ 10 N

Mechanical properties

Mechanical data

Insertion/withdrawal cycles	100
Insertion force	≤ 75 N
Withdrawal force	≥ 10 N

Environmental and real-life conditions

Ambient conditions

Degree of protection (when plugged in)	IP65 (The panel is feed-through hole)
Degree of protection (not plugged in)	IP20
Degree of protection	IP65
Ambient temperature (operation)	-40 °C ... 70 °C
Ambient temperature (storage/transport)	-40 °C ... 70 °C

Standards and regulations

Standard designation	TÜV (PPP51090A)
Standards/specifications	IEC 61984:2008
	EN 61984:2008
	UL 4128
	PPP 51090A

Drawings

Dimensional drawing

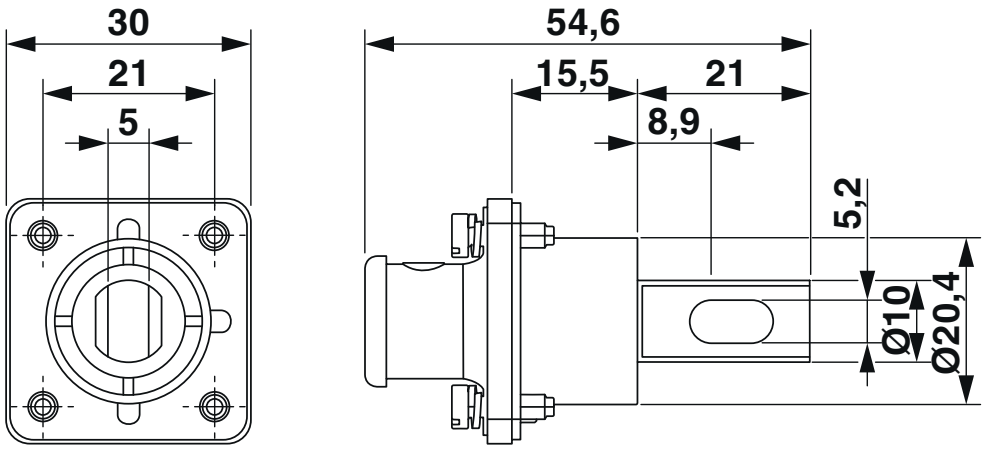

Drilling plan/solder pad geometry

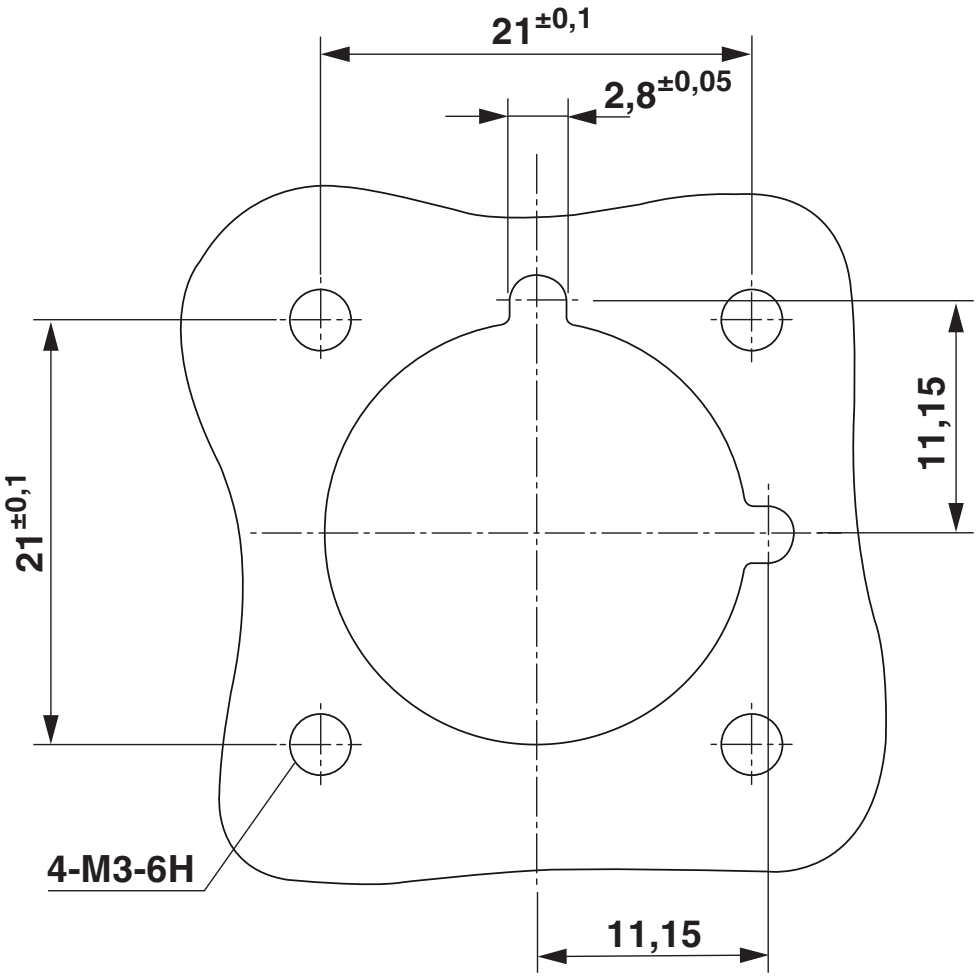

Approvals

To download certificates, visit the product detail page: https://www.phoenixcontact.com/us/products/1130816

TÜV SÜD Type tested
Approval ID: 704071905102-03

	Nominal voltage U_N	Nominal current I_N	Cross section AWG	Cross section mm^2
keine				
	1500 V	120 A	-	16 - 25

UL Recognized
Approval ID: E511681-20200609

	Nominal voltage U_N	Nominal current I_N	Cross section AWG	Cross section mm^2
keine				
	1000 V	120 A	- 4	-

Classifications

ECLASS

ECLASS-13.0	27440209
ECLASS-15.0	27440209

ETIM

ETIM 9.0	EC002641

UNSPSC

UNSPSC 21.0	26121600

Environmental product compliance

EU RoHS

Fulfills EU RoHS substance requirements	Yes, No exemptions

China RoHS

Environment friendly use period (EFUP)	EFUP-E
	No hazardous substances above the limits

EU REACH SVHC

REACH candidate substance (CAS No.)	No substance above 0.1 wt%

Phoenix Contact 2025 © - all rights reserved
https://www.phoenixcontact.com

Phoenix Contact USA
586 Fulling Mill Road
Middletown, PA 17057, United States
(+717) 944-1300
info@phoenixcon.com