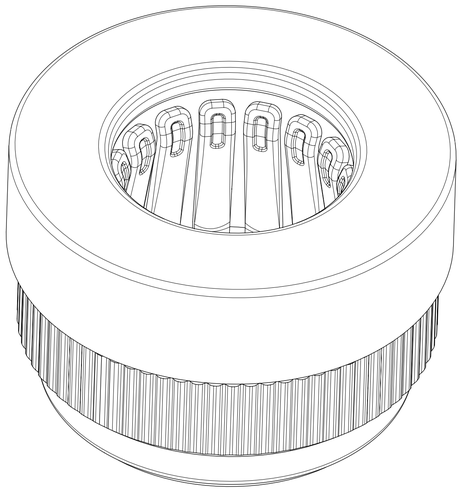

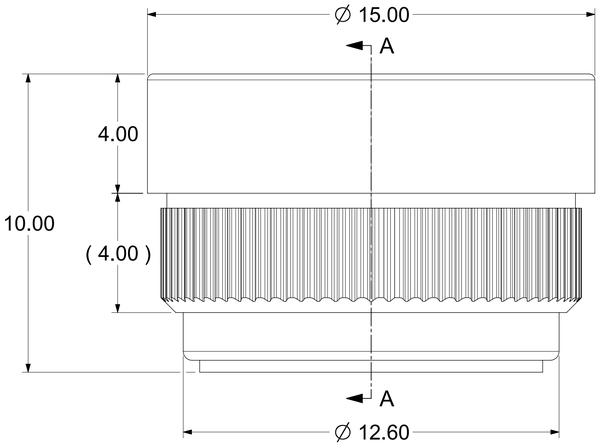

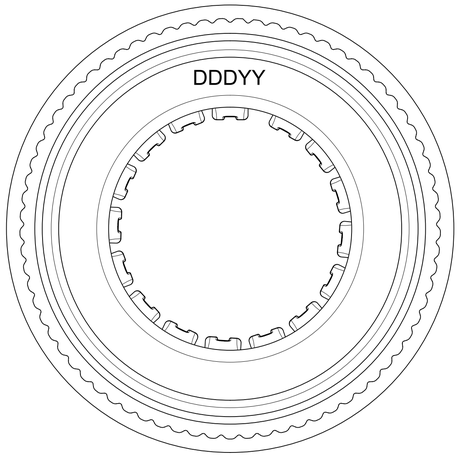

RECOMMENDED DRILL(ON BUSBAR)

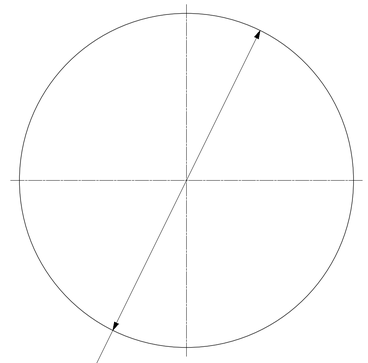

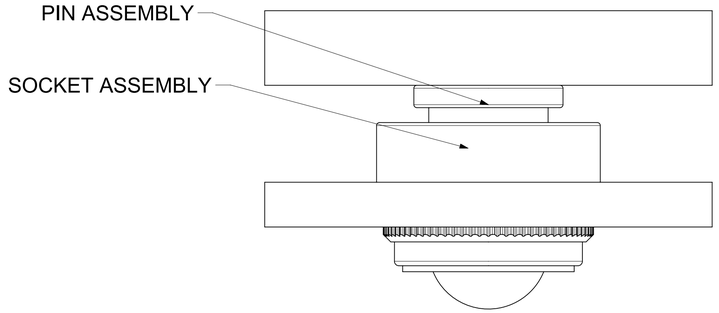

MATING PROFILE

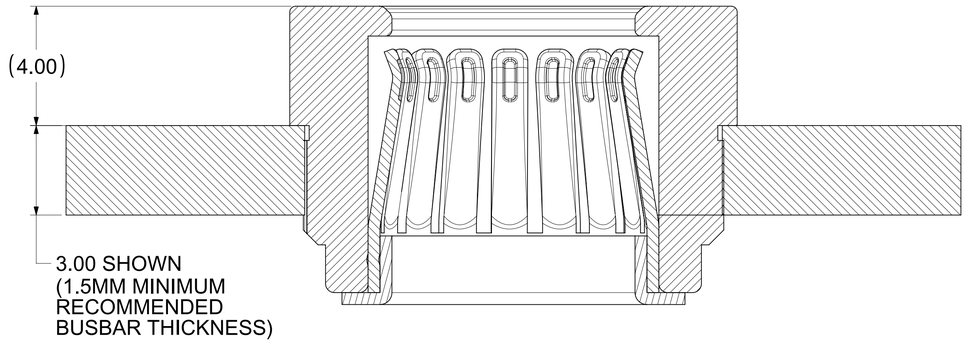

SECTION A-A

NOTES:
1. MATERIALS:
   RETENTION CAP: STAINLESS STEEL
   BASE METAL: HIGH CONDUCTIVE COPPER ALLOY
   PLATING ON CONTACTS: 0.75 MICRON MIN GOLD OVER 1.27 MICRON MIN NICKEL
   PLATING ON BODY: 3.18 MICRON MIN SILVER OVER 1.27 MICRON MIN NICKEL
2. MATES WITH STANDARD PIN DRAWINGS:
   i. 8.0MM SMT DRAWING 2032633080-SD, MIN. MATING DISTANCE 6.15MM
   ii. 8.0MM PRESS FIT DRAWING 2032630001-SD, MIN. MATING DISTANCE 6.5MM
   iii. 8.0MM SCREW MOUNT DRAWING 2032634185-SD, MIN. MATING DISTANCE 9.5MM
3. PRODUCT SPECIFICATION: 2043130001-PS
4. APPLICATION SPECIFICATION: 2043130001-AS
5. PACKAGING SPECIFICATION: 2043180001-PK.
6. SILVER COMPONENTS WILL BE SUPPLIED TARNISH FREE
   BUT MAY TARNISH OVER TIME.
7. DATE CODE TO BE LASER MARKED APPROXIMATELY
   WHERE SHOWN USING DDDYY FORMAT

THIS DRAWING CONTAINS INFORMATION THAT IS PROPRIETARY TO MOLEX ELECTRONIC TECHNOLOGIES, LLC AND SHOULD NOT BE USED WITHOUT WRITTEN PERMISSION

DIMENSION UNITS	SCALE
mm	NTS

GENERAL TOLERANCES (UNLESS SPECIFIED)

ANGULAR TOL	±	0.5 °
4 PLACES	±	
3 PLACES	±	
2 PLACES	±	0.15
1 PLACE	±	0.25
0 PLACES	±	

DRAFT WHERE APPLICABLE MUST REMAIN WITHIN DIMENSIONS

CURRENT REV DESC: UPDATED PCB/BUSBAR HOLE DIMENSION.UPDATED THE TITLE BLOCK

EC NO: 747243
DRWN: RLOW 2021/05/11
CHK'D: SCS02 2023/04/25
APPR: HTHYAGARAJ 2023/04/26

INITIAL REVISION:
DRWN: TOMLU 2017/03/10
APPR: JJONIAK 2018/06/14

molex

8.0MM SENTRALITY TOP ENTRY PRESS FIT STANDARD SOCKET IN TRAY

PRODUCT CUSTOMER DRAWING

DOCUMENT NUMBER	DOC TYPE	DOC PART	REVISION
2043160001-SD	PSD	000	B1

THIRD ANGLE PROJECTION	DRAWING	SERIES	MATERIAL NUMBER	CUSTOMER	SHEET NUMBER
	D-SIZE	204316	2043160001	GENERAL MARKET	1 OF 1

DOCUMENT STATUS	P1	RELEASE DATE	2023/05/08	05:38:43

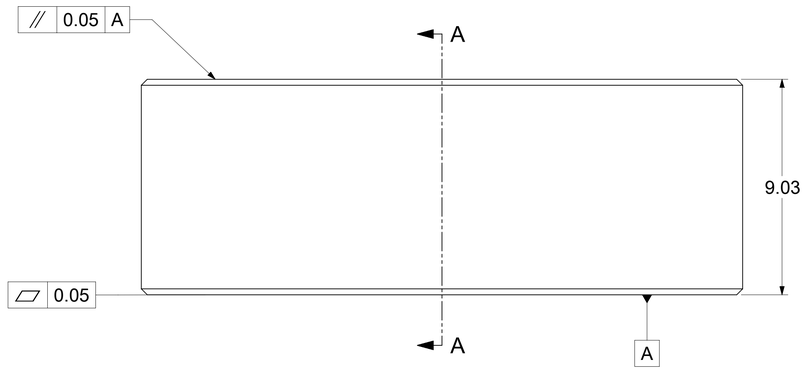

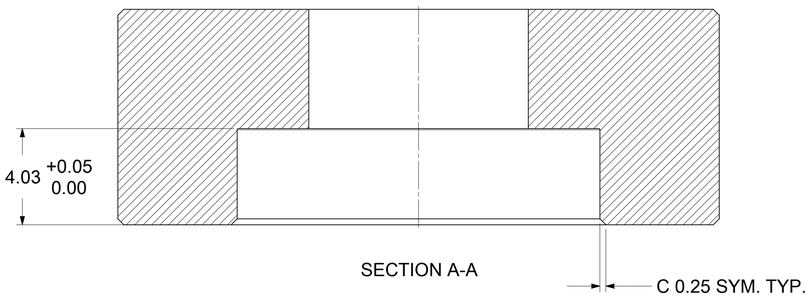

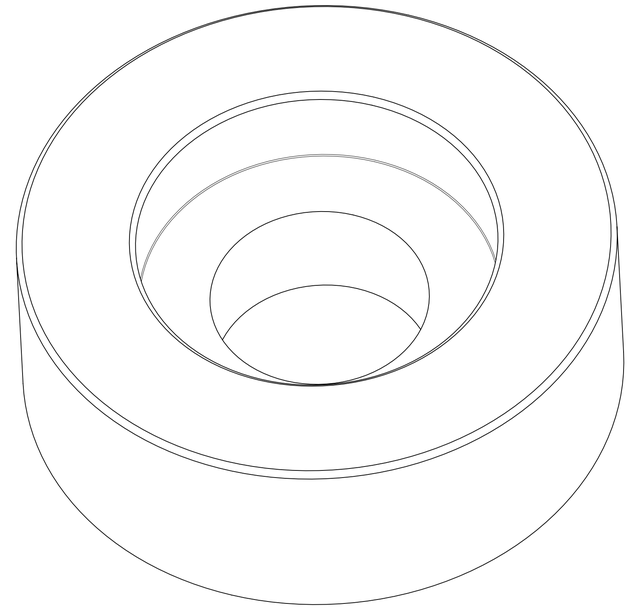

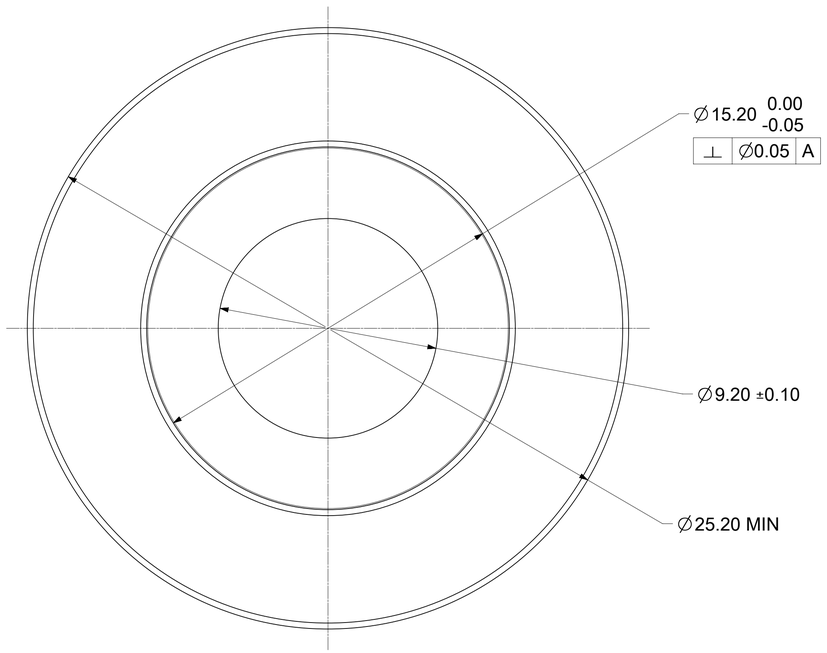

NOTES:
1. MATERIAL: STAINLESS STEEL
2. BREAK ALL SHARP CORNERS AND EDGES

THIS DRAWING CONTAINS INFORMATION THAT IS PROPRIETARY TO MOLEX ELECTRONIC TECHNOLOGIES, LLC AND SHOULD NOT BE USED WITHOUT WRITTEN PERMISSION

DIMENSION UNITS	mm
SCALE	8:1
GENERAL TOLERANCES (UNLESS SPECIFIED)	
ANGULAR TOL	± 0.5 °
4 PLACES	±
3 PLACES	±
2 PLACES	± 0.05
1 PLACE	± 0.1
0 PLACES	±
DRAFT WHERE APPLICABLE MUST REMAIN WITHIN DIMENSIONS	

CURRENT REV DESC: INITIAL RELEASE

EC NO: 771891
DRWN: SOURAJ 2022/04/11
CHK'D: SCS02 2023/12/15
APPR: KPRASAD 2023/12/19

INITIAL REVISION:
DRWN: SOURAJ 2022/04/11
APPR: KPRASAD 2023/12/19

molex

SENTRALITY APPLICATION TOOLING FOR 8.0MM STANDARD SOCKET

PRODUCT CUSTOMER DRAWING

DOCUMENT NUMBER	DOC TYPE	DOC PART	REVISION
2192590108-SD	PSD	000	A

THIRD ANGLE PROJECTION	DRAWING	SERIES	MATERIAL NUMBER	CUSTOMER	SHEET NUMBER
	D-SIZE	219259	2192590108	GENERAL MARKET	1 OF 1

DOCUMENT STATUS	P1	RELEASE DATE	2023/12/19 10:05:23