# TMC 73D 04A - Miniature Circuit Breaker

1020085

https://www.phoenixcontact.com/us/products/1020085

Please be informed that the data shown in this PDF document is generated from our online catalog. Please find the complete data in the user documentation. Our general terms of use for downloads are valid.



Thermal-magnetic Miniature Circuit Breaker, 3-position, use: Supplementary Protection (UL 1077), for protection against overload up to a short-circuit current of 7.5 kA, tripping characteristic: D, mounting type: NS 35/..., rated current: 4 A

## Your advantages

- Can be used worldwide due to international approvals
- Suitable for various grid types, as it is available in 1-, 2-, 3-pos. versions
- Ideally coordinated protection due to various tripping characteristics and a wide selection of nominal currents
- Reduced inventory because of suitability for AC and DC applications
- Optional accessories enable remote control and monitoring

## Commercial data

| | |
|---|---|
| Item number | 1020085 |
| Packing unit | 1 pc |
| Minimum order quantity | 1 pc |
| Note | Made to order (non-returnable) |
| Sales key | CL09 |
| Product key | CLA126 |
| GTIN | 4055626509679 |
| Weight per piece (including packing) | 222.222 g |
| Weight per piece (excluding packing) | 222.222 g |
| Customs tariff number | 85362010 |
| Country of origin | CN |

## Technical data

### Product properties

| | |
|---|---|
| Product type | Circuit breakers |
| Product family | TMC 7 |
| Type | DIN rail module, one-piece |
| Number of positions | 3 |
| Mechanical service life | 20000 |
| Special properties | Supplementary Protection (UL 1077), for protection against overload up to a short-circuit current of 7.5 kA Thermal-magnetic |

### Electrical properties

| | |
|---|---|
| Service life electrical | 6000 |

General

| | |
|---|---|
| Operating voltage | 277 V AC (277/480Y, 240D) |
| Rated current $I_N$ | 4 A |
| Tripping method | TM (thermal-magnetic) |
| Rated short-circuit switching capacity $I_{cn}$ | 7.5 kA (277/480Y, 240D) |
| Fuse | D |
| Contact switching type | none |

### Connection data

| | |
|---|---|
| Conductor cross-section rigid | 1 mm² ... 35 mm² |
| Cross section AWG | 18 ... 2 (converted acc. to IEC) |
| Conductor cross-section flexible | 1 mm² ... 35 mm² |
| Connection method | Screw connection |
| Tightening torque, min | 2 Nm |
| Stripping length | 11 mm ... 12 mm |
| Conductor cross-section flexible max. | 35 mm² |
| Conductor cross-section, rigid max. | 35 mm² |

### Dimensions

| | |
|---|---|
| Dimensional drawing | 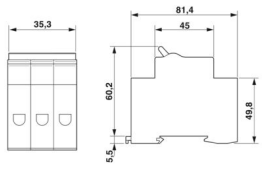  |
| Width | 52.9 mm |
| Height | 84.3 mm |
| Depth | 76.6 mm (incl. DIN rail 7.5 mm) |

### Material specifications

| | |
|---|---|
| Color | light gray (RAL 7035) |

| | |
|---|---|
| | light gray (RAL 7035) |

## Environmental and real-life conditions

Ambient conditions

| | |
|---|---|
| Degree of protection | IP20 |
| Ambient temperature (operation) | -35 °C ... 70 °C |
| Humidity test | 48 h, 95% RH, 40°C (IEC 60068-2-78) |
| Shock (operation) | 30g (11 ms) (IEC 60068-2-11, test Ea) |
| Vibration (operation) | ±0.38 mm (10 Hz ... 57 Hz), 5g (57 Hz ... 500 Hz) (Sinusoidal test to IEC 60068-2-6, Test Fc. 10 frequency cycles per axis) |

## Standards and regulations

| | |
|---|---|
| Standards/specifications | UL 1077 |
| Standards/specifications | IEC 60947-2 |

## Mounting

| | |
|---|---|
| Mounting type | NS 35/... |

## Drawings

Dimensional drawing

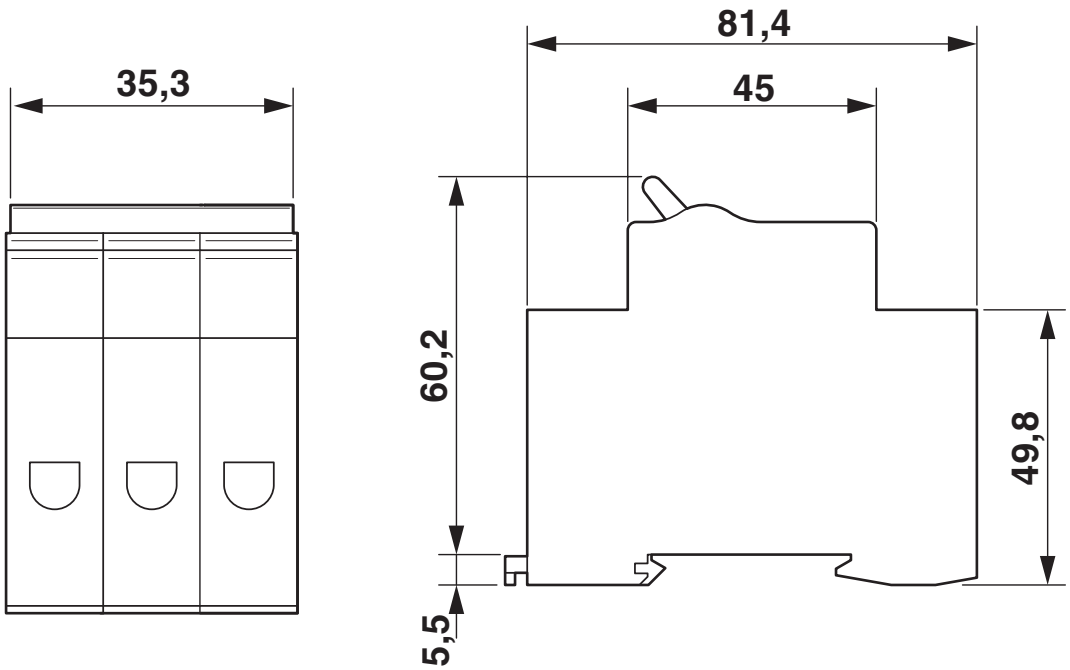

Diagram

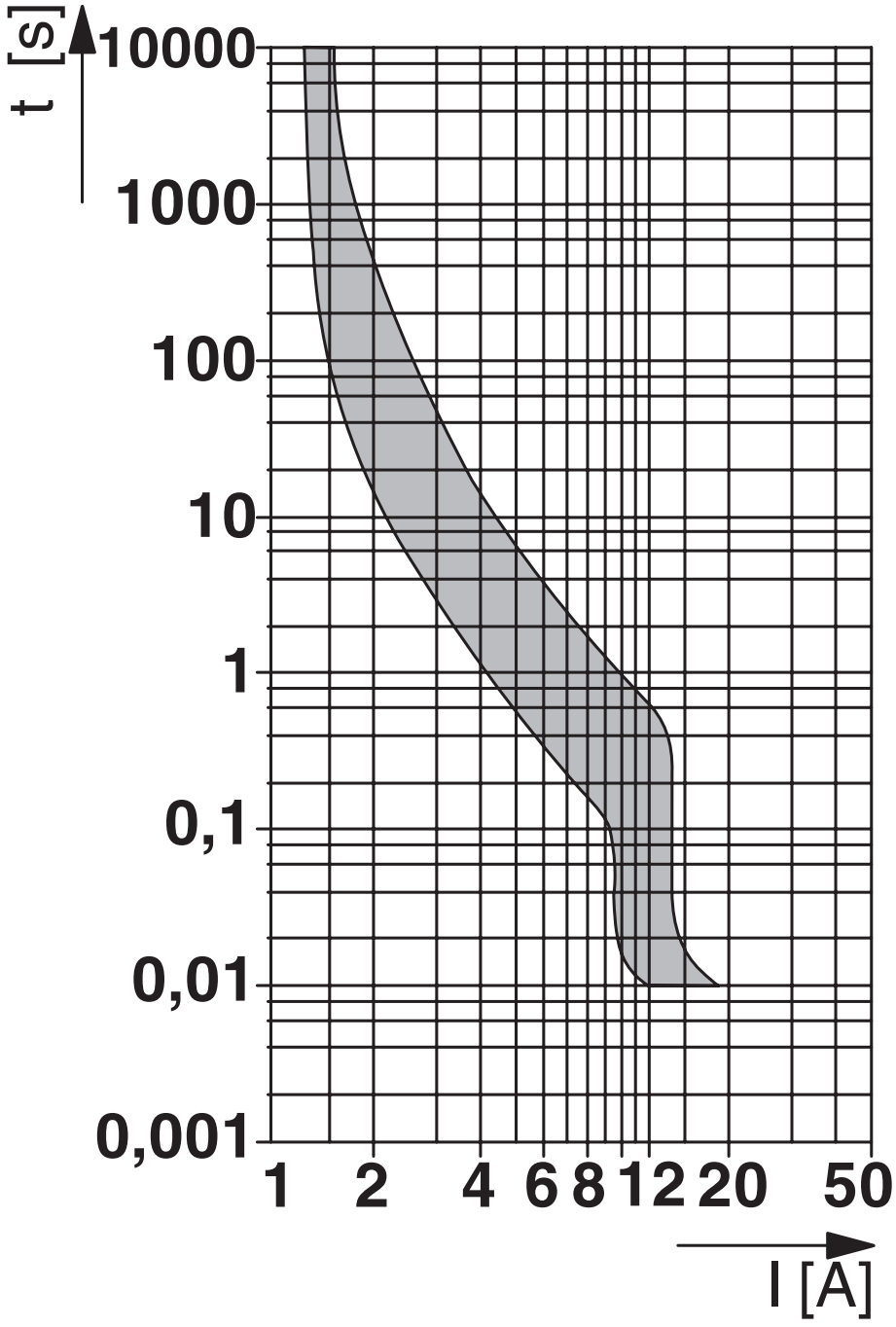

## Approvals

To download certificates, visit the product detail page: https://www.phoenixcontact.com/us/products/1020085

**cUL Recognized**
Approval ID: FILE E 140459

**UL Recognized**
Approval ID: FILE E 140459

**TÜV Rheinland**
Approval ID: R 50531587

**CCC**
Approval ID: 2024010307673885

## Classifications

### ECLASS

| | |
|---|---|
| ECLASS-13.0 | 27140401 |
| ECLASS-15.0 | 27140401 |

### ETIM

| | |
|---|---|
| ETIM 9.0 | EC003538 |

### UNSPSC

| | |
|---|---|
| UNSPSC 21.0 | 39121410 |

## Environmental product compliance

EU RoHS

| | |
|---|---|
| Fulfills EU RoHS substance requirements | Yes, No exemptions |

China RoHS

| | |
|---|---|
| Environment friendly use period (EFUP) | EFUP-E |
| | No hazardous substances above the limits |

EU REACH SVHC

| | |
|---|---|
| REACH candidate substance (CAS No.) | No substance above 0.1 wt% |

Phoenix Contact 2025 © - all rights reserved
https://www.phoenixcontact.com

Phoenix Contact USA
586 Fulling Mill Road
Middletown, PA 17057, United States
(+717) 944-1300
info@phoenixcon.com