PSM-ME-REP LON485-P - Repeater

2708041

https://www.phoenixcontact.com/us/products/2708041

Please be informed that the data shown in this PDF document is generated from our online catalog. Please find the complete data in the user documentation. Our general terms of use for downloads are valid.



Repeater, for potential isolation and increasing the range in RS-485 2-wire LON bus systems, 3-way isolation, rail-mountable

Your advantages

- Integrated surge protection with transient discharge to the DIN rail
- Space-saving slim 22.5 mm device
- High-quality 3-way isolation between all interfaces
- Integrated, connectable termination resistors
- All connections can be plugged in using a COMBICON screw terminal block

Commercial data

Item number	2708041
Packing unit	1 pc
Minimum order quantity	1 pc
Sales key	DN11
Product key	DNC111
GTIN	4017918907570
Weight per piece (including packing)	200.9 g
Weight per piece (excluding packing)	188.8 g
Customs tariff number	85176200
Country of origin	DE

Technical data

Notes

Utilization restriction

EMC note	EMC: class A product, see manufacturer's declaration in the download area

Utilization restriction

CCCex note	Use in potentially explosive areas is not permitted in China.

Product properties

Product type	Interface converter
Application	RS-485
MTTF	1808 Years (SN 29500 standard, temperature 25°C, operating cycle 21%)
	796 Years (SN 29500 standard, temperature 40°C, operating cycle 34.25%)
	334 Years (SN 29500 standard, temperature 40°C, operating cycle 100%)

Insulation characteristics

Pollution degree	2

Electrical properties

Electrical isolation	VCC // RS-485 (A) // RS-485 (B)
Maximum power dissipation for nominal condition	2.16 W
Test voltage data interface/power supply	1.5 kV_{rms} (50 Hz, 1 min.)

Supply

Supply voltage range	19.2 V AC/DC ... 28.8 V AC/DC
Nominal supply voltage	24 V AC/DC ±20 %
Typical current consumption	90 mA (24 V DC)
Max. current consumption	100 mA

Connection data

Supply

Tightening torque	0.56 Nm ... 0.79 Nm

Interfaces

Bit distortion	< 1.5 % (applies to device: Distortions caused by system-specific cables are not accounted for)
Signal	LON
Transmission channels	2 (1/1), RxD, TxD, full duplex

Data: RS-485 interface, in acc. with EIA/TIA-485, DIN 66259-4/RS-485 2-wire

Serial transmission speed	39.1/ 78.1/ 500/ 625/ 1000/ 1250/ 2000 kbps

Connection method	Pluggable screw connection
Transmission length	≤ 1200 m (depends on transmission speed, bus system and cable type)
Termination resistor	120 Ω
Single-wire/terminal point, flexible	0.2 mm² ... 2.5 mm²
Max. AWG conductor cross section, flexible	14
Min. AWG conductor cross section, flexible	24
Transmission medium	2-wire twisted pair, shielded
File format/coding	Manchester, slip-tolerant
Data direction switching	Automatic control

Data: RS-485 interface, in acc. with EIA/TIA-485, DIN 66259-4/RS-485 2-wire

Serial transmission speed	39.1/ 78.1/ 500/ 625/ 1000/ 1250/ 2000 kbps
Connection method	Pluggable screw connection
Transmission length	≤ 1200 m (depends on transmission speed, bus system and cable type)
Termination resistor	120 Ω
Single-wire/terminal point, flexible	0.2 mm² ... 2.5 mm²
Max. AWG conductor cross section, flexible	14
Min. AWG conductor cross section, flexible	24
Transmission medium	2-wire twisted pair, shielded
File format/coding	Manchester, slip-tolerant
Data direction switching	Automatic control

Dimensions

Dimensional drawing	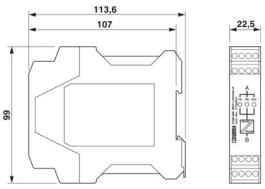
Width	22.5 mm
Height	99 mm
Depth	114.5 mm

Material specifications

Color (Housing)	green (RAL 6021)
Material Housing	PA

Environmental and real-life conditions

Ambient conditions

Degree of protection	IP20
Ambient temperature (operation)	-40 °C ... 70 °C
Ambient temperature (storage/transport)	-40 °C ... 85 °C
Altitude	≤ 5000 m (For restrictions, see the manufacturer's declaration for

	altitude operation)
Permissible humidity (operation)	10 % ... 95 % (non-condensing)

Approvals

CE

Certificate	CE-compliant

ATEX

Identification	II 3 G Ex nA IIC T4 Gc
Certificate	IBExU16ATEXB004 X
Note	Please follow the special installation instructions in the documentation!

IECEx

Identification	Ex nA IIC T4 Gc
Certificate	IECEx IBE 15.0034X

UL, USA/Canada

Identification	508 Recognized
	Class I, Div. 2, Groups A, B, C, D
	Class I, Zone 2, AEx nA IIC T4
	Class I, Zone 2, Ex nA IIC T4 Gc X

Corrosive gas test

Identification	ISA-S71.04-1985 G3 Harsh Group A

EMC data

Noise immunity	EN 61000-6-2:2005
Electromagnetic compatibility	Conformance with EMC Directive 2014/30/EU
Noise emission	EN 61000-6-4

Electrostatic discharge

Standards/regulations	EN 61000-4-2

Electrostatic discharge

Contact discharge	± 6 kV (Test Level 3)
Discharge in air	± 8 kV (Test Level 3)
Comments	Criterion B

Electromagnetic HF field

Standards/regulations	EN 61000-4-3

Electromagnetic HF field

Frequency range	80 MHz ... 3 GHz (Test Level 3)
Field intensity	10 V/m
Comments	Criterion A

Fast transients (burst)

Standards/regulations	EN 61000-4-4

Fast transients (burst)

Input	± 4 kV (Test Level 3)
Signal	± 2 kV (Test Level 3)
Comments	Criterion B

Surge current load (surge)

Standards/regulations	EN 61000-4-5

Surge current load (surge)

Input	± 0.5 kV
Signal	± 2 kV
Comments	Criterion B

Conducted interference

Standards/regulations	EN 61000-4-6

Conducted interference

Frequency range	0.15 MHz ... 80 MHz
Comments	Criterion A
Voltage	10 V

Emitted interference

Standards/regulations	EN 55011
Comments	Class A, industrial applications

Criteria

Criterion A	Normal operating behavior within the specified limits.
Criterion B	Temporary impairment to operational behavior that is corrected by the device itself.

Mounting

Mounting type	DIN rail mounting

Drawings

Schematic diagram

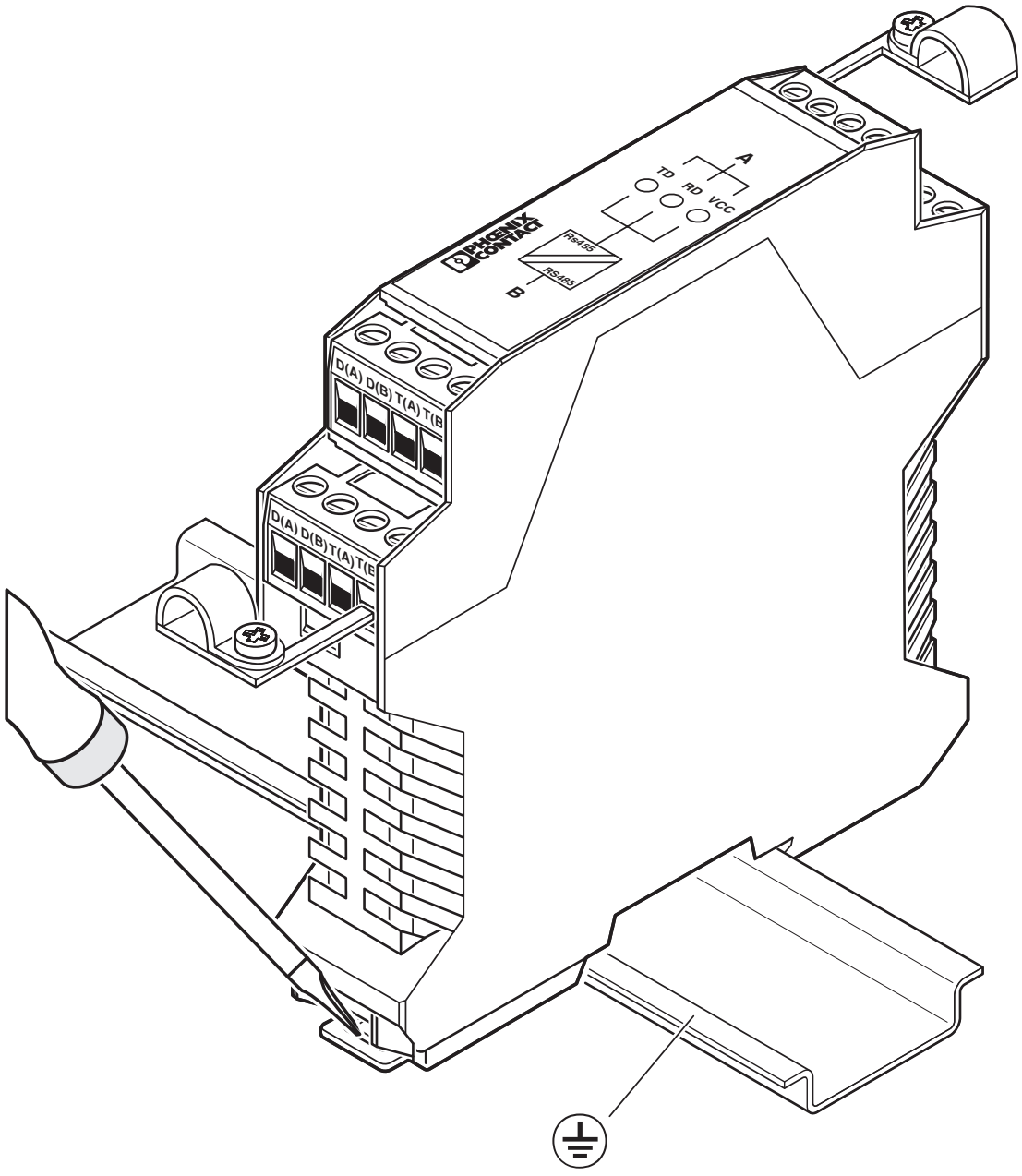

Removal

Application drawing

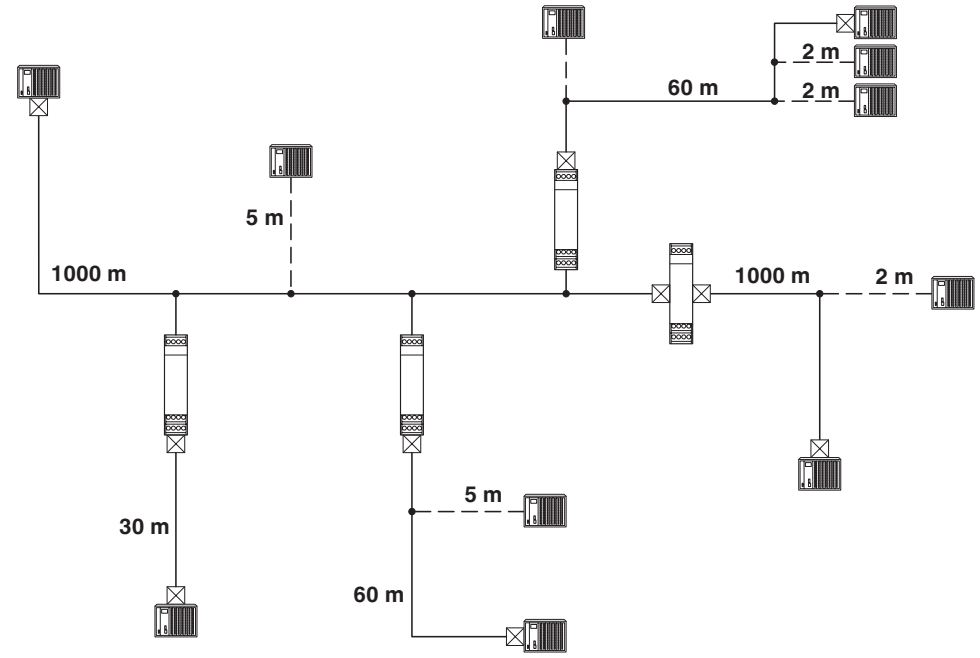

Cable lengths

Connection diagram

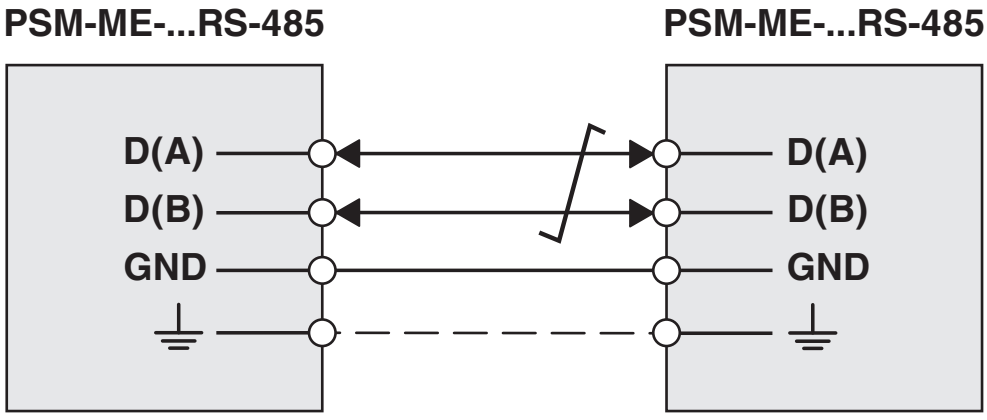

RS-485 interface

Application drawing

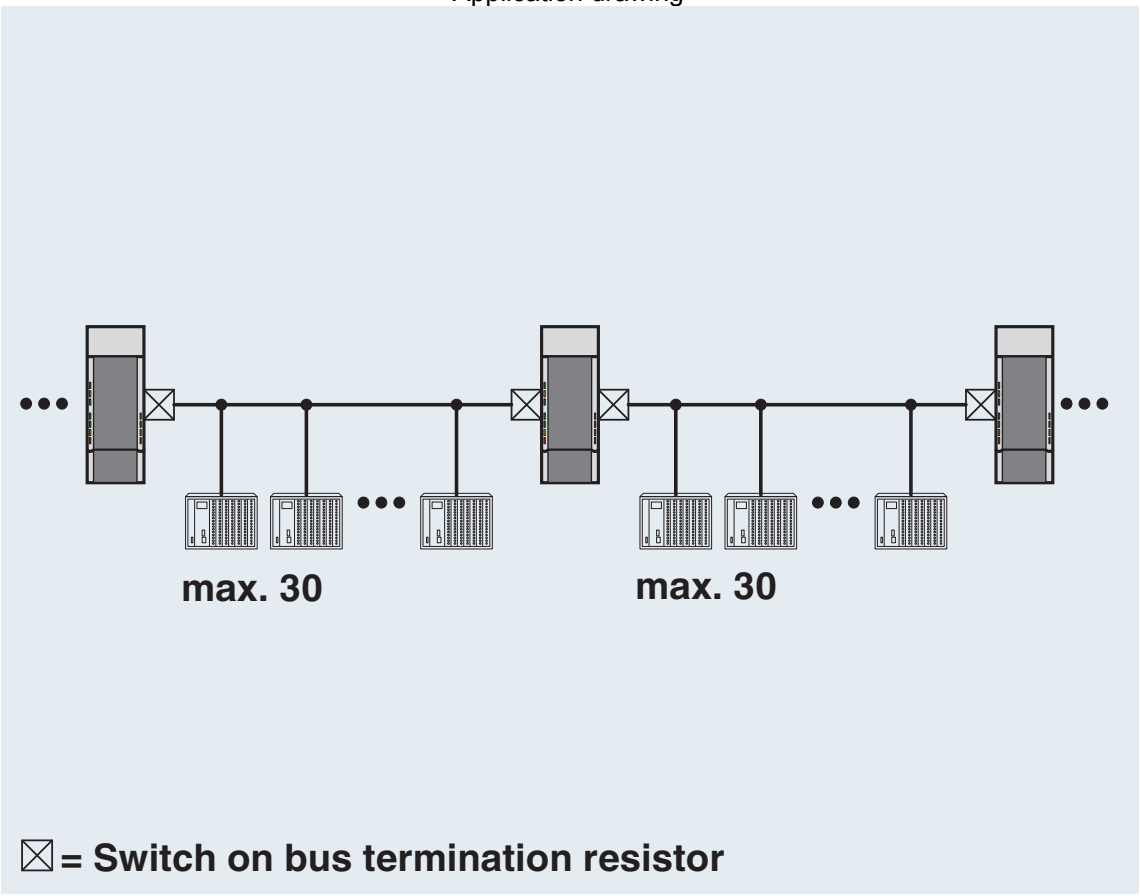

Line structure

Circuit diagram

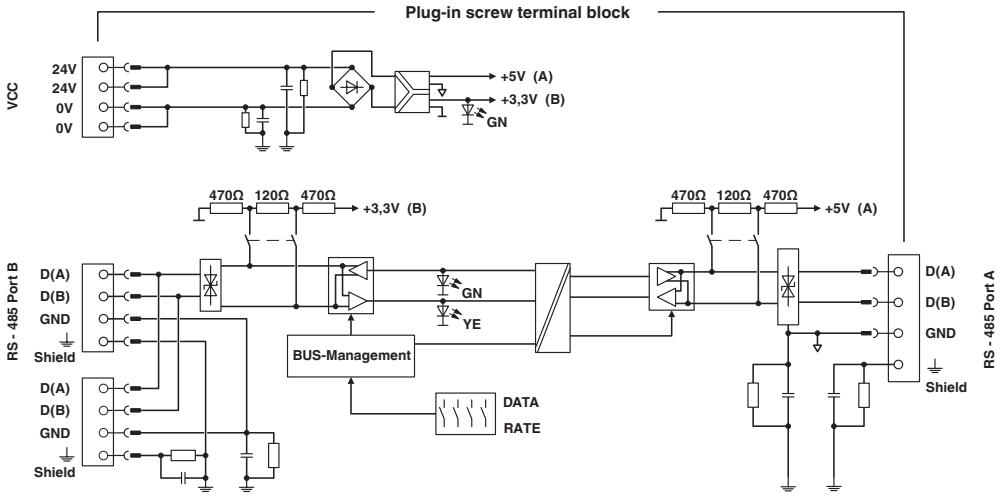

Schematic diagram

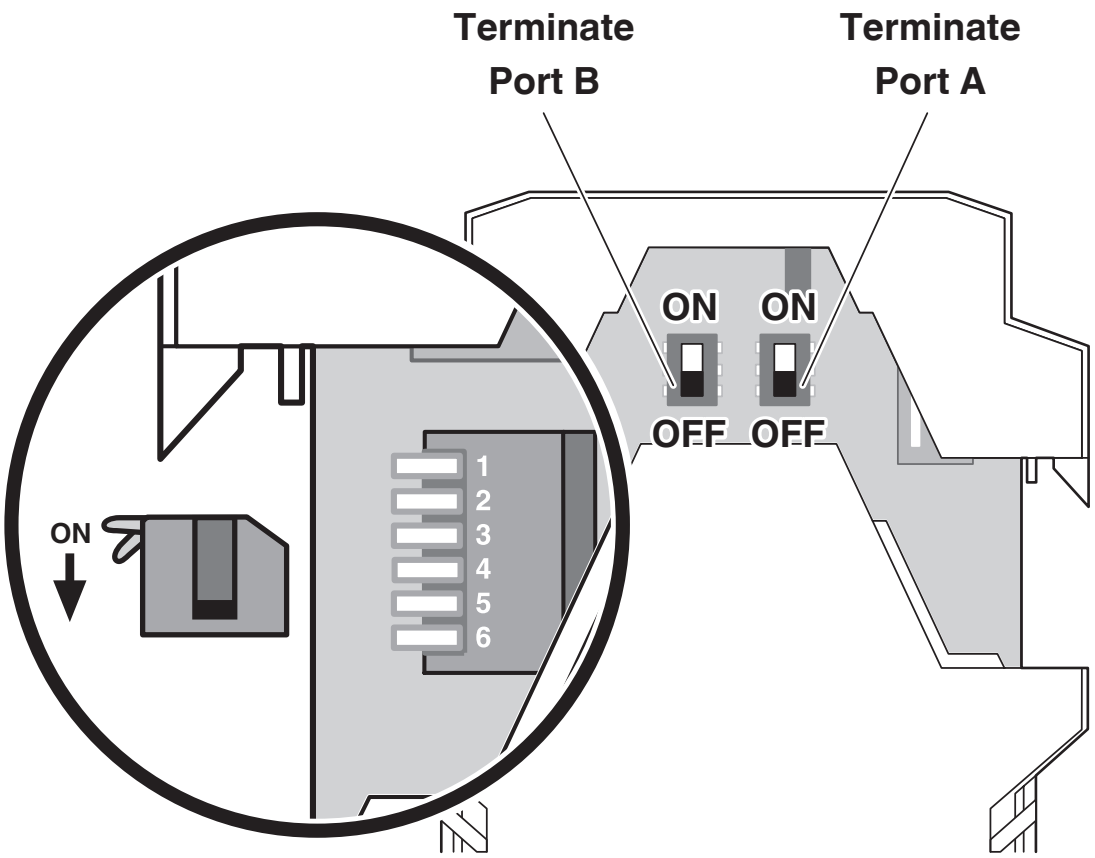

DIP switches

Dimensional drawing

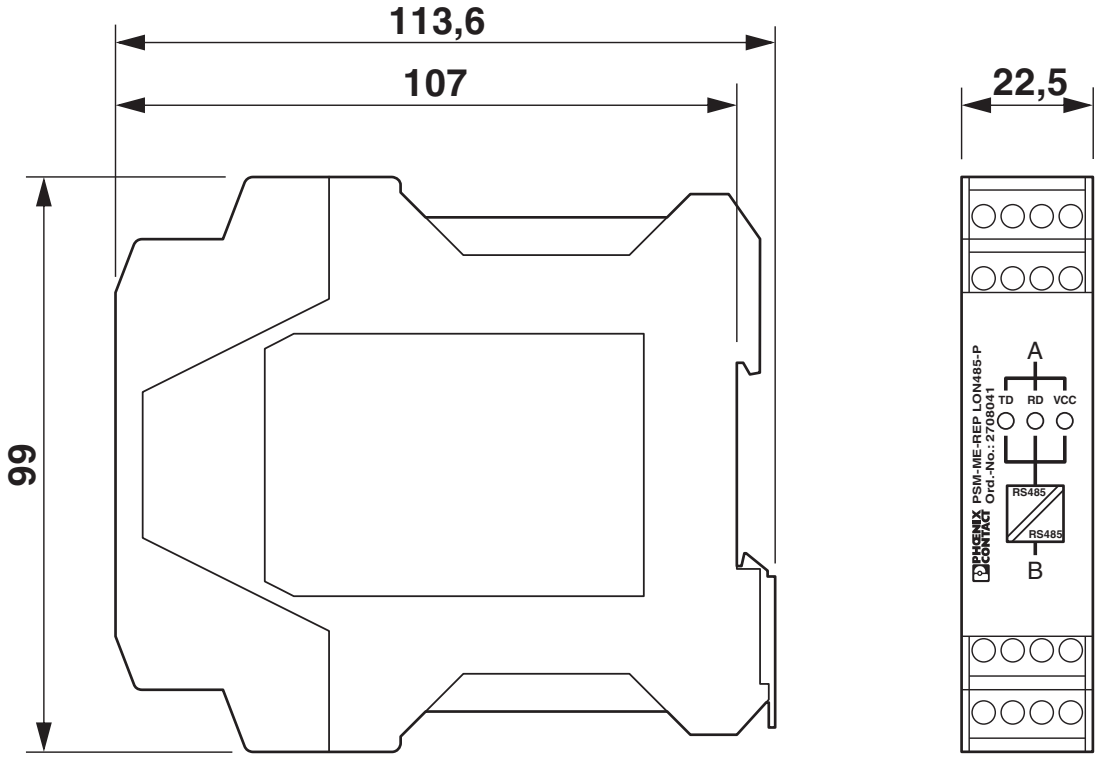

Slim design

Application drawing

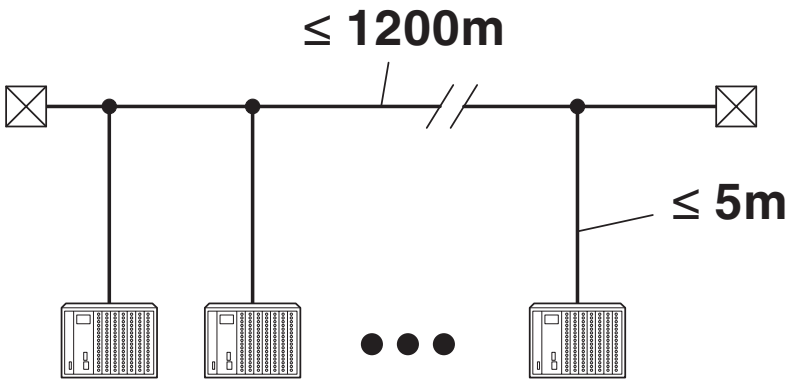

Cable lengths according to the RS-485 standard

Approvals

To download certificates, visit the product detail page: https://www.phoenixcontact.com/us/products/2708041

cUL Recognized
Approval ID: FILE E 238705

UL Recognized
Approval ID: FILE E 238705

EAC
Approval ID: RU *-DE.A*30.B.01735

UAE-RoHS
Approval ID: 23-02-63194

cUL Recognized
Approval ID: FILE E 199827

	Nominal voltage U_N	Nominal current I_N	Cross section AWG	Cross section mm^2
	24 V	0.075 A	-	-

IECEx
Approval ID: IECEx IBE 15.0034 X

cUL Listed
Approval ID: FILE E 199827

UL Listed
Approval ID: FILE E 199827

ATEX
Approval ID: IBExU 16 ATEX B004 X

cULus Recognized

cULus Listed

Classifications

ECLASS

ECLASS-11.0	27242208
ECLASS-12.0	27242208
ECLASS-13.0	27242208

ETIM

ETIM 9.0	EC001423

UNSPSC

UNSPSC 21.0	43222600

Environmental product compliance

EU RoHS

Fulfills EU RoHS substance requirements	Yes
Exemption	7(a), 7(c)-I

China RoHS

Environment friendly use period (EFUP)	EFUP-50
	An article-related China RoHS declaration table can be found in the download area for the respective article under "Manufacturer declaration". For all articles with EFUP-E, no China RoHS declaration table issued and required.

EU REACH SVHC

REACH candidate substance (CAS No.)	Lead(CAS: 7439-92-1)
SCIP	1a6ace2e-f988-42c7-9e94-a0e16f23b5e2

Accessories

ME-SAS - Shield connection clamp

2853899

https://www.phoenixcontact.com/us/products/2853899



Shield connection clamp for terminal points starting from 2.5 mm^2

SZF 1-0,6X3,5 - Screwdriver

1204517

https://www.phoenixcontact.com/us/products/1204517



Actuation tool, for ST terminal blocks, also suitable for use as a bladed screwdriver, size: 0.6 x 3.5 x 100 mm, 2-component grip, with non-slip grip

Phoenix Contact 2024 © - all rights reserved
https://www.phoenixcontact.com

Phoenix Contact USA
586 Fulling Mill Road
Middletown, PA 17057, United States
(+717) 944-1300
info@phoenixcon.com