SCS 24VDC P2SIL3ES

Weidmüller Interface GmbH & Co. KG
Klingenbergstraße 26
D-32758 Detmold
Germany

www.weidmueller.com

Especially for areas of process automation in which the functionally safe shutdown of the fuel supply to combustion plants is necessary. The relay complies with SIL3 and meets the requirements of EN ISO 13849-1 (PLe).

- TUV certified “Approved Safety Function”
- Forcibly guided contacts according to EN 61810-3 Type B
- 2-channel design suitable for protection of human and machine
- Can be used for electrical equipment of combustion plants according to EN 50156

General ordering data

Version	SAFESERIES, Safety relay,24 V DC ±15 %, 24 VDC +15% / -10% during auto-start, 35 mA, 5, SIL 3, DIN EN 61508, EN ISO 13849-1 (PLe)
Order No.	1319280000
Type	SCS 24VDC P2SIL3ES
GTIN (EAN)	4050118125078
Qty.	1 pc(s).

SCS 24VDC P2SIL3ES

Weidmüller Interface GmbH & Co. KG
Klingenbergstraße 26
D-32758 Detmold
Germany

www.weidmueller.com

Technical data

Dimensions and weights

Depth	114.1 mm	Depth (inches)	4.492 inch
Height	119.6 mm	Height (inches)	4.709 inch
Width	22.5 mm	Width (inches)	0.886 inch
Net weight	292 g		

Temperatures

Storage temperature	-40 °C...85 °C	Operating temperature	-25 °C...55 °C
Humidity	40 °C / 93 % rel. humidity, no condensation		

Input (power supply)

Connection designation	A1, A2, C1, C2	Rated control voltage	24 V DC ±15 %, 24 VDC +15% / -10% during auto-start
Current consumption	55 mA (release circuit enabled), 6 mA (release circuit not enabled)	Guaranteed current consumption at 24 V DC -10%	35 mA
Inrush current	750 mA / 5 ms (for starting with S33/S34 (start circuit)), 2 A / 20 ms (for starting with A1/A2 (autostart))	Response time	with bridge via C1/C2: typ. 50 ms, without bridge via C1/C2: typ. 20 ms
Status display	LED green: supply, Yellow LED: signal	Protective circuit	Reverse polarity protection, Free-wheeling diode
Short-circuit detection	Yes, max. 4 s up to disconnection (thermistor)		

Starting circuit

Anschlussbezeichnung	S33, S34, S35	Operating voltage	22 V DC, from internal power supply
Function	falling edge (button via S33/S34), rising edge (permanent bridge via S33/S35)		

Monitoring circuit

Connection designation	S11, S12, S21, S22	Input	2, each externally bridgeable
Operating voltage	22 V DC, from internal power supply		

Output (release circuit)

Connection designation	13, 14, 23, 24	Contact design	2 NO positively-driven (EN 50205 type B)
Contact base material	AgSnO	Switching voltage AC, max.	250 V
Max. permissible switching current	5 A	Max. switching current, external fuse	5 A
Max. switching capacity	1250 VA	External back-up fuse	5 A time-lag
Turn-on time	55 ms (C1/C2 bridged, switched via A1/A2), 30 ms (opening/closing of monitoring circuit)	Turn-off time	55 ms (C1/C2 bridged, switched via A1/A2), 15 ms (opening/closing of monitoring circuit)
Min. switching capacity	10 mA @ 12 V		

Weidmüller

SCS 24VDC P2SIL3ES

Weidmüller Interface GmbH & Co. KG
Klingenbergstraße 26
D-32758 Detmold
Germany

www.weidmueller.com

Technical data

Feedback output

Connection designation	31, 32	Contact design	1 NC positively-driven (EN 50205 type B)
Switching voltage AC, max.	250 V	Max. switching current.	1 A

Safety-related basic specifications

Device type	A	T_{proof}	12 a
Hardware fault tolerance (HFT)	1	Safety category	SIL 3
Safety standard	DIN EN 61508, EN ISO 13849-1 (PLe)		

General data

Operating altitude	≤ 2000 m, above sea level	Rail	TS 35
Colour	black, yellow		

Insulation coordination

Rated voltage	300 V	Pollution severity	2
Surge voltage category	III	Clearance and creepage distances for control side - load side	≥ 5.5 mm
Dielectric strength for control side - load side	4 kV_{eff} / 1 min	Dielectric strength to mounting rail	4 kV_{eff} / 1 Min.
Impulse withstand voltage	6 kV (1.2/50 µs)	Protection degree	IP20

Further details of approvals / standards

Standards	EN 61000, EN 61326-3-2, EN ISO 13849-1 (PLe)	Equipment for furnaces	EN 50156

Connection data

Wire connection method	Screw connection	Stripping length, rated connection	8 mm
Tightening torque, min.	0.4 Nm	Tightening torque, max.	0.6 Nm
Clamping range, rated connection	1.5 mm²	Clamping range, min.	0.13 mm²
Clamping range, max.	2.5 mm²	Wire connection cross section AWG, min.	AWG 26
Wire connection cross section AWG, max.	AWG 12	Wire cross-section, solid, min.	0.2 mm²
Wire cross-section, solid, max.	2.5 mm²	Wire connection cross section, finely stranded, min.	0.2 mm²
Wire connection cross section, finely stranded, max.	2.5 mm²	Wire connection cross-section, finely stranded with wire-end ferrules DIN 46228/4, min.	0.2 mm²
Wire connection cross-section, finely stranded with wire-end ferrules DIN 46228/4, max.	2.5 mm²	Conductor cross-section, flexible, AEH (DIN 46228-1), min.	0.2 mm²
Conductor cross-section, flexible, AEH (DIN 46228-1), max.	2.5 mm²	Blade size	size PH0

SCS 24VDC P2SIL3ES

Weidmüller Interface GmbH & Co. KG
Klingenbergstraße 26
D-32758 Detmold
Germany

www.weidmueller.com

Technical data

Classifications

ETIM 6.0	EC001449	ETIM 7.0	EC001449
ETIM 8.0	EC001449	ETIM 9.0	EC001449
ECLASS 9.0	27-37-18-19	ECLASS 9.1	27-37-18-19
ECLASS 10.0	27-37-18-19	ECLASS 11.0	27-37-18-19
ECLASS 12.0	27-37-18-19	ECLASS 13.0	27-37-18-19

Environmental Product Compliance

REACH SVHC	Lead 7439-92-1 6,6'-di-tert-butyl-2,2'-methylenedi-p-cresol 119-47-1
SCIP	332bc555-bc84-431d-ba7a-563be05e80bd

Approvals

Approvals	
ROHS	Conform

Downloads

Approval/Certificate/Document of Conformity	TUV Safety Approved certificate EG-Baumusterprüfbescheinigung / EC type-examination certificate EU Konformitätserklärung / EU Declaration of Conformity
Engineering Data	CAD data – STEP
Software	Library and function block – SISTEMA library 2.0
User Documentation	Beipackzettel / Package Insert - multilingual Sicherheitshandbuch – Deutsch Safety manual – English
Catalogues	Catalogues in PDF-format
Brochures	

SCS 24VDC P2SIL3ES

Weidmüller Interface GmbH & Co. KG
Klingenbergstraße 26
D-32758 Detmold
Germany

www.weidmueller.com

Drawings

Wiring diagram

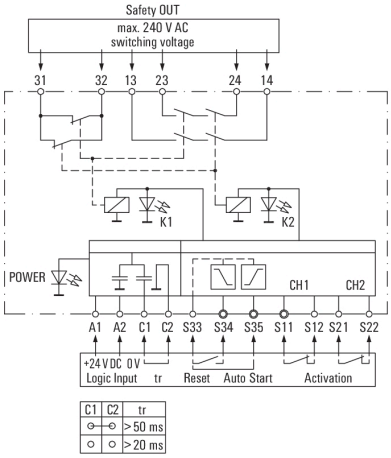

DC load limit curve

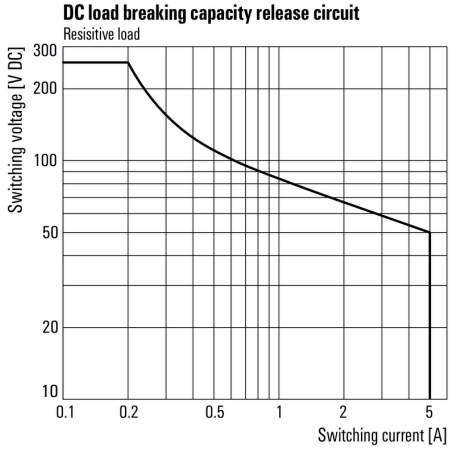

Dimensioned drawing

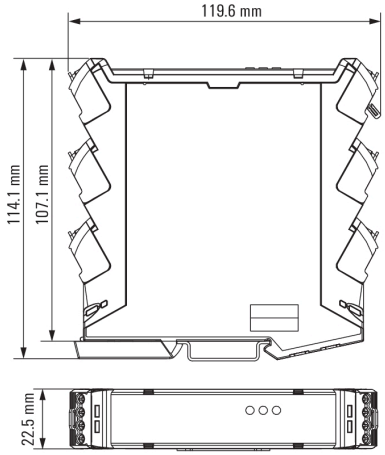

SCS 24VDC P2SIL3ES

Weidmüller Interface GmbH & Co. KG
Klingenbergstraße 26
D-32758 Detmold
Germany

www.weidmueller.com

Accessories

Blank, adhesive backing

SM is a MultiCard marker for labelling control and signalling devices. The tags are clipped into the carriers or attached by means of the adhesive film already fitted to them. Customised tags can be created with the PrintJet CONNECT or Plotter marking systems.

- Users can quickly produce tags to suit their needs
- No need to stock expensive standard tags
- Highly resistant printing quality when using the PrintJet as a substitute for engraving
- For extreme demands, we recommend the ETO SM protective film
- Holders can be used for the 22-mm or 30-mm-diameter push-buttons from Siemens, ABB, Moeller and Télémécanique

For custom printing: Please send us a file of our labeling software M-Print PRO or M-Print PRO Online (without installation) for your labeling specifications.

General ordering data

Type	SM 18/9.5 K MC NE GE	Version
Order No.	1248590000	SwitchMark, Device markers, 9.5 x 18 mm, Siemens 3 SB, yellow
GTIN (EAN)	4050118038958	
Qty.	200 pc(s).	
Type	SM 18/9.5 K MC NE GR	Version
Order No.	1248610000	SwitchMark, Device markers, 9.5 x 18 mm, grey
GTIN (EAN)	4050118038675	
Qty.	200 pc(s).	
Type	SM 18/9.5 K MC NE WS	Version
Order No.	1248580000	SwitchMark, Device markers, 9.5 x 18 mm, white
GTIN (EAN)	4050118038965	
Qty.	200 pc(s).	

ESG 6/17

Guaranteed long service life: ESG
The multi-colour and multi-format labels have a strong adhesive layer to ensure the best possible adhesion to the underlying surface. Double laminated polyester makes the basic material very thin and yet extremely tear-resistant.
Your benefits with MultiMark

- “Different materials for various requirements“
- Can be used with equipment from many manufacturers
- Device markers with a familiar design

General ordering data

Type	ESG 6/17 MM WS	Version
Order No.	2005100000	ESG, Device markers, 6 x 17 mm, white
GTIN (EAN)	4050118390728	
Qty.	3,000 pc(s).	

SCS 24VDC P2SIL3ES

Weidmüller Interface GmbH & Co. KG
Klingenbergstraße 26
D-32758 Detmold
Germany

www.weidmueller.com

Accessories

Type	ESG 6/17 MM GE	Version
Order No.	2005110000	ESG, Device markers, 6 x 17 mm, yellow
GTIN (EAN)	4050118390827	
Qty.	3,000 pc(s).	

Blank

ESG is the tried-and-tested marker in MultiCard format for use on many well-known electrical devices. The result is high-quality device marking with a high-contrast appearance.
Various types are available for devices from manufacturers like Siemens, ABB, Beckhoff etc.
Advantages at a glance:

- Tags for universal usage, self-adhesive or clip-on tags, depending on type
- For aligned equipment, e.g. circuit breakers, we supply ESG markers for clipping onto tag rails
- Individual laser-quality printing according to specifications

For custom printing: Please send us a file of our labeling software M-Print PRO or M-Print PRO Online (without installation) for your labeling specifications.

General ordering data

Type	ESG 6/15 K MC NE GE	Version
Order No.	1880130000	ESG, Device markers x 15 mm, PA 66, Colour: yellow, Self-adhesive
GTIN (EAN)	4032248478910	
Qty.	200 pc(s).	
Type	ESG 6/15 K MC NE WS	Version
Order No.	1880100000	ESG, Device markers x 15 mm, PA 66, Colour: white, Self-adhesive
GTIN (EAN)	4032248478781	
Qty.	200 pc(s).	

SCS 24VDC P2SIL3ES

Weidmüller Interface GmbH & Co. KG
Klingenbergstraße 26
D-32758 Detmold
Germany

www.weidmueller.com

Accessories

SM 18/9.5

Prevention of incorrect operation: SM
MultiMark device markers can be used with marking materials from different manufacturers.Wherever they are used, they ensure that all components, such as control and signalling devices from different vendors, are clearly assigned.

Your benefits with MultiMark
- “Different materials for various requirements”
- Can be used with equipment from many manufacturers
- Device markers with a familiar design

General ordering data

Type	SM 18/9.5 MM GR	Version
Order No.	2006260000	SwitchMark, Device markers, 9 x 18 mm, grey
GTIN (EAN)	4050118390964	
Qty.	1,000 pc(s).	
Type	SM 18/9.5 MM GE	Version
Order No.	2006240000	SwitchMark, Device markers, 9 x 18 mm, yellow
GTIN (EAN)	4050118390698	
Qty.	1,000 pc(s).	
Type	SM 18/9.5 MM WS	Version
Order No.	2006220000	SwitchMark, Device markers, 9 x 18 mm, white
GTIN (EAN)	4050118391435	
Qty.	1,000 pc(s).	

SCS 24VDC P2SIL3ES

Weidmüller Interface GmbH & Co. KG
Klingenbergstraße 26
D-32758 Detmold
Germany

www.weidmueller.com

Accessories

Blank

ESG is the tried-and-tested marker in MultiCard format for use on many well-known electrical devices. The result is high-quality device marking with a high-contrast appearance.
Various types are available for devices from manufacturers like Siemens, ABB, Beckhoff etc.
Advantages at a glance:

- Tags for universal usage, self-adhesive or clip-on tags, depending on type
- For aligned equipment, e.g. circuit breakers, we supply ESG markers for clipping onto tag rails
- Individual laser-quality printing according to specifications

For custom printing: Please send us a file of our labeling software M-Print PRO or M-Print PRO Online (without installation) for your labeling specifications.

General ordering data

Type	ESG 6.6/20 BHZ 5.00/04	Version
Order No.	1082540000	ESG, Device markers x 20 mm, PA 66, Colour: white
GTIN (EAN)	4032248845439	
Qty.	200 pc(s).	

Blank

ESG is the tried-and-tested marker in MultiCard format for use on many well-known electrical devices. The result is high-quality device marking with a high-contrast appearance.
Various types are available for devices from manufacturers like Siemens, ABB, Beckhoff etc.
Advantages at a glance:

- Tags for universal usage, self-adhesive or clip-on tags, depending on type
- For aligned equipment, e.g. circuit breakers, we supply ESG markers for clipping onto tag rails
- Individual laser-quality printing according to specifications

For custom printing: Please send us a file of our labeling software M-Print PRO or M-Print PRO Online (without installation) for your labeling specifications.

General ordering data

Type	ESG 6/17 K MC NE WS	Version
Order No.	1880120000	ESG, Device markers x 17 mm, PA 66, Colour: white, Self-adhesive
GTIN (EAN)	4032248478804	
Qty.	200 pc(s).	

SCS 24VDC P2SIL3ES

Weidmüller Interface GmbH & Co. KG
Klingenbergstraße 26
D-32758 Detmold
Germany

www.weidmueller.com

Accessories

Type	ESG 6/17 K MC NE GE	Version
Order No.	1880110000	ESG, Device markers x 17 mm, PA 66, Colour: yellow, Self-adhesive
GTIN (EAN)	4032248478798	
Qty.	200 pc(s).	

Yellow

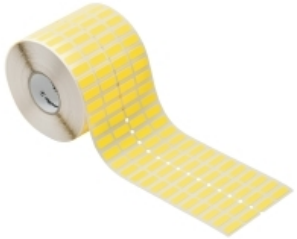

THM GEW woven-fabric labels are made from a very flexible cotton fabric. Delivery on reels for use with thermal transfer printers enables an adhesive layer which is thicker than that of A4 sheets for office laser printers. Together, this flexibility and the thick adhesive layer ensure higher adhesive strength and enable use on angular or round objects such as e.g. cables or hoses.

General ordering data

Type	THM GEW 15/6 GE	Version	Packaging
Order No.	1059790000	THM, Device markers, 6 x 15 mm, yellow	Reel
GTIN (EAN)	4032248808182		
Qty.	1 pc(s).		

Crosshead screwdriver Phillips

VDE insulated crosshead screwdriver, for Phillips screws, SDIK PH DIN 7438, ISO 8764/2-PH, output to ISO 8764-PH, SoftFinish grip

General ordering data

Type	SDIK PH0 X 60	Version
Order No.	2749880000	Screwdriver, Blade width (B): 0 mm, 60 mm, Blade thickness (A): 0
GTIN (EAN)	4050118897081	
Qty.	1 pc(s).	

SCS 24VDC P2SIL3ES

Weidmüller Interface GmbH & Co. KG
Klingenbergstraße 26
D-32758 Detmold
Germany

www.weidmueller.com

Accessories

White

THM GEW woven-fabric labels are made from a very flexible cotton fabric. Delivery on reels for use with thermal transfer printers enables an adhesive layer which is thicker than that of A4 sheets for office laser printers. Together, this flexibility and the thick adhesive layer ensure higher adhesive strength and enable use on angular or round objects such as e.g. cables or hoses.

General ordering data

Type	THM GEW 15/6 WS	Version
Order No.	1059780000	THM, Device markers, 6 x 15 mm, white
GTIN (EAN)	4032248808175	
Qty.	1 pc(s).	

Crosshead screwdriver Phillips

Crosshead screwdriver, Phillips, SDK PH DIN 5262, ISO 8764/2-PH, output to ISO 8764-PH, ChromTop tip, SoftFinish grip

General ordering data

Type	SDK PH0 X 60	Version
Order No.	2749400000	Screwdriver, Blade width (B): 60 mm, Blade thickness (A):
GTIN (EAN)	4050118895629	
Qty.	1 pc(s).	

SCS 24VDC P2SIL3ES

Weidmüller Interface GmbH & Co. KG
Klingenbergstraße 26
D-32758 Detmold
Germany

www.weidmueller.com

Accessories

ESG 6/15

Guaranteed long service life: ESG
The multi-colour and multi-format labels have a strong adhesive layer to ensure the best possible adhesion to the underlying surface. Double laminated polyester makes the basic material very thin and yet extremely tear-resistant.
Your benefits with MultiMark
- "Different materials for various requirements"
- Can be used with equipment from many manufacturers
- Device markers with a familiar design

General ordering data

Type	ESG 6/15 MM WS	Version
Order No.	2619940000	ESG, Device markers, 6 x 15 mm, white
GTIN (EAN)	4050118626148	
Qty.	3,000 pc(s).	

Blank

ESG is the tried-and-tested marker in MultiCard format for use on many well-known electrical devices. The result is high-quality device marking with a high-contrast appearance.
Various types are available for devices from manufacturers like Siemens, ABB, Beckhoff etc.
Advantages at a glance:
- Tags for universal usage, self-adhesive or clip-on tags, depending on type
- For aligned equipment, e.g. circuit breakers, we supply ESG markers for clipping onto tag rails
- Individual laser-quality printing according to specifications

For custom printing: Please send us a file of our labeling software M-Print PRO or M-Print PRO Online (without installation) for your labeling specifications.

General ordering data

Type	ESG 9/11 K MC NE WS	Version
Order No.	1857440000	ESG, Device markers x 11 mm, PA 66, Colour: white, Self-adhesive
GTIN (EAN)	4032248402731	
Qty.	200 pc(s).	

SCS 24VDC P2SIL3ES

Weidmüller Interface GmbH & Co. KG
Klingenbergstraße 26
D-32758 Detmold
Germany

www.weidmueller.com

Drawings

Miscellaneous

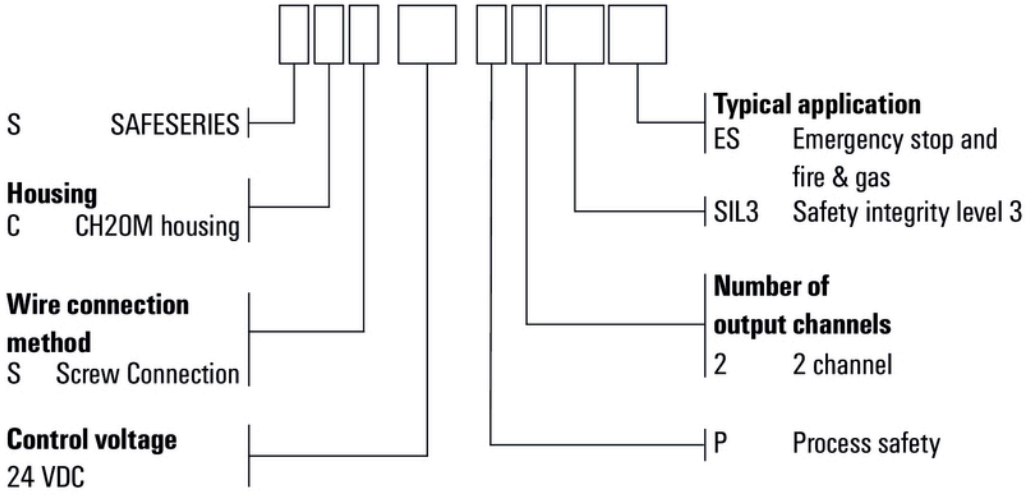

Type codes