CUI DEVICES

SERIES: SJ2-25406X-SMT | DESCRIPTION: AUDIO JACK

DISCONTINUED

FEATURES

- gold flash terminal plating
- low profile design
- reflow solder compatible
- surface mount

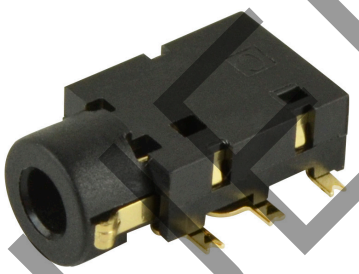

RoHS

PART NUMBER KEY

SJ2-25406 **X X** - SMT-TR

Base Number	# Conductors:	Switch Options:	Package Style:	Packaging:
	4 = 4 6 = 6	A = no switch	SMT = surface mount	TR = Tape & Reel

SPECIFICATIONS

parameter	conditions/description	min	typ	max	units
rated input voltage			12		Vdc
rated input current				1	A
contact resistance[1]	between terminal and mating plug between terminal in a closed circuit			50 30	mΩ mΩ
insulation resistance	at 500 Vdc	100			MΩ
voltage withstand	for 1 minute			500	Vac
insertion/withdrawal force		0.3		3	kg
operating temperature		-25		85	°C
life	at a rate of 24 cycles/minute		5,000		cycles
flammability rating	UL94V-0				
RoHS	yes				

Note: 1. When measured at a current of less than 100 mA/1 kHz
2. All specifications measured at 10~35°C, humidity at 45~85%, under standard atmospheric pressure, unless otherwise noted.

MECHANICAL DRAWING

units: mm
tolerance:
X.X ±0.2 mm
X.XX ±0.10 mm
X.XXX ±0.050 mm
PCB: ±0.05 mm

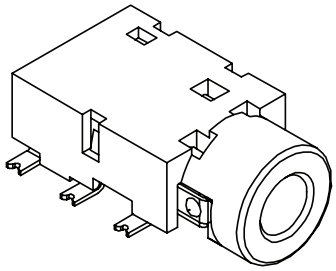

	MATERIAL	PLATING
terminal 1	copper alloy	gold flash
terminal 2	copper alloy	gold flash
terminal 3	copper alloy	gold flash
terminal 4	copper alloy	gold flash
terminal 5	copper alloy	gold flash
terminal 6	copper alloy	gold flash
terminal 7	copper alloy	gold flash
plastic	PA10T	

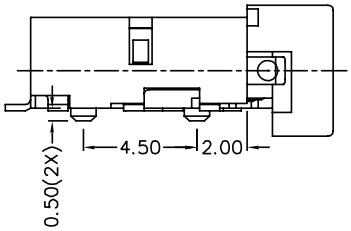

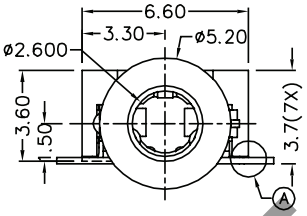

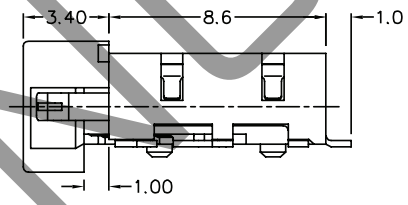

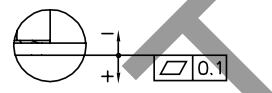

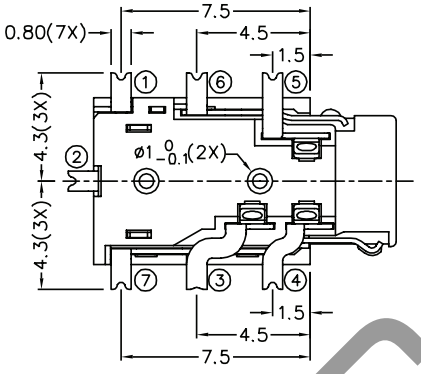

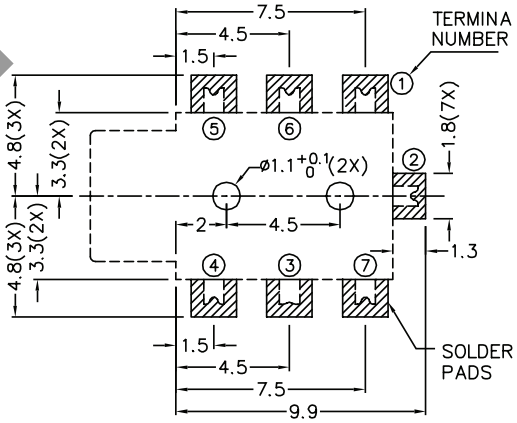

Recommended PCB Layout
Top View

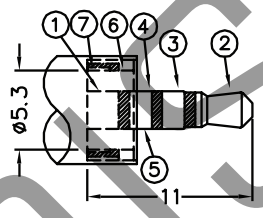

Ø2.5 MATING PLUG

Model No.	SJ2-254064A-SMT	SJ2-254066A-SMT
Schematic	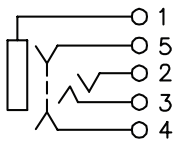	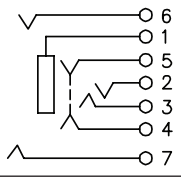
PIN		
1	sleeve	sleeve
2	tip	tip
3	ring 1	ring 1
4	ring 2	ring 2
5	ring 2	ring 2
6	NP	outer ring 1
7	NP	outer ring 2

DISCONTINUED

SOLDERABILITY

parameter	conditions/description	min	typ	max	units
reel storage	at relative humidity <80%			40	°C
reflow soldering[1]	see reflow profile	255	260	265	°C
drying conditions[2]	parts in reel: bake at 40°C ±5°C for 72 hours parts removed from reel: bake at 40°C ±5°C for 10 hours				

Note: 1. Must reflow solder within 72 hours from opening vacuum packaging at a temperature <30°C & relative humidity <60%.
2. When exceeding floor life by >72 hours.

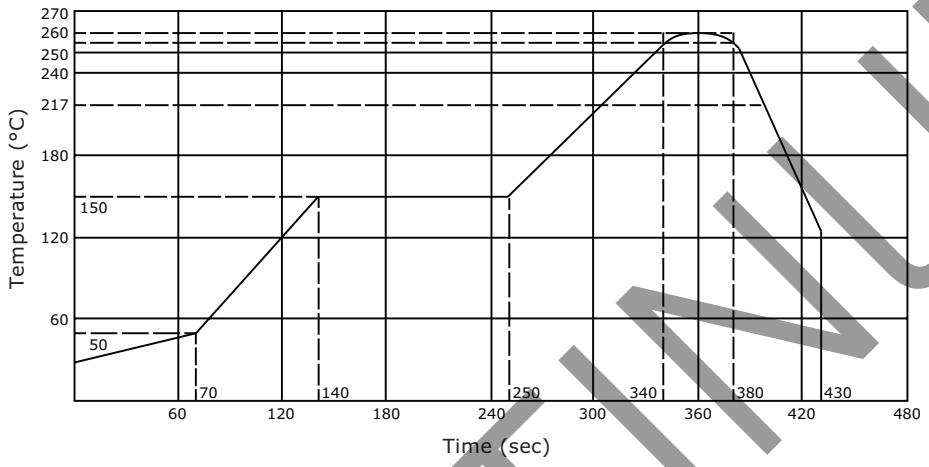

PACKAGING

units: mm

Reel Size: Ø381 mm
Reel QTY: 1,000 pcs per reel

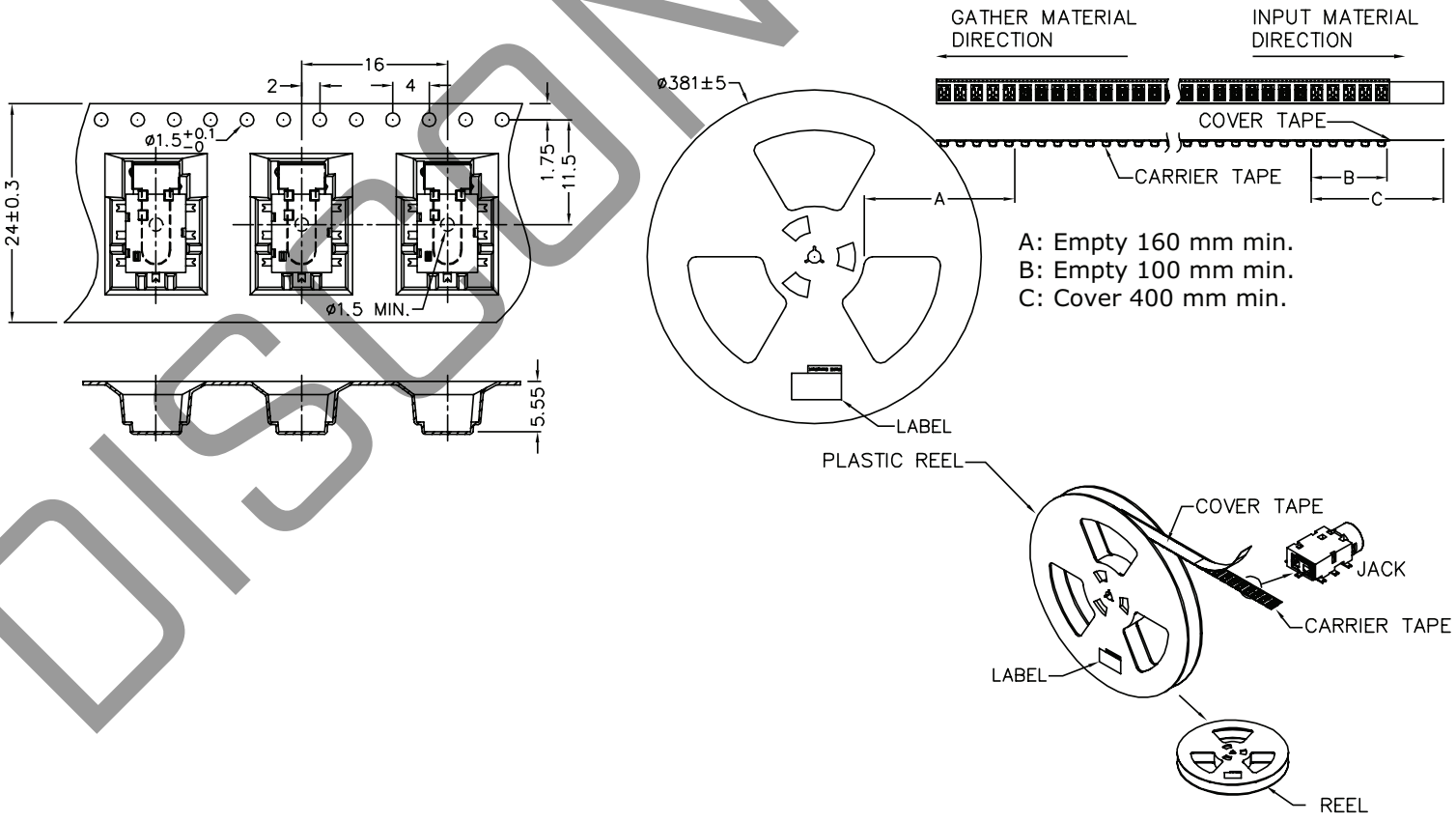

DISCONTINUED

REVISION HISTORY

rev.	description	date
1.0	initial release	12/09/2016
1.01	added storage and drying conditions	06/09/2017
1.02	brand update	10/07/2019

The revision history provided is for informational purposes only and is believed to be accurate.

DISCONTINUED

CUI Devices offers a one (1) year limited warranty. Complete warranty information is listed on our website.

CUI Devices reserves the right to make changes to the product at any time without notice. Information provided by CUI Devices is believed to be accurate and reliable. However, no responsibility is assumed by CUI Devices for its use, nor for any infringements of patents or other rights of third parties which may result from its use.

CUI Devices products are not authorized or warranted for use as critical components in equipment that requires an extremely high level of reliability. A critical component is any component of a life support device or system whose failure to perform can be reasonably expected to cause the failure of the life support device or system, or to affect its safety or effectiveness.