SF-08KS010 - Crimp contact

1621571

https://www.phoenixcontact.com/us/products/1621571

Please be informed that the data shown in this PDF document is generated from our online catalog. Please find the complete data in the user documentation. Our general terms of use for downloads are valid.



Crimp contact, Socket, turned, contact diameter: 0.8 mm, crimp range: 0.08 mm^2 ... 0.25 mm^2, Alternative product in accordance with RoHS II without Exemption 6c (Pb < 0.1 %) item no.: 1244455

Your advantages

- Crimping connection: vibration- and temperature-resistant assembly
- High tensile strength of the connection
- Low contact resistance
- Easy production monitoring

Commercial data

Item number	1621571
Packing unit	100 pc
Minimum order quantity	100 pc
Sales key	AB36
Product key	ABREAC
Catalog page	Page 121 (C-2-2019)
GTIN	4046356937276
Weight per piece (including packing)	0.124 g
Weight per piece (excluding packing)	0.096 g
Customs tariff number	85366990
Country of origin	DE

Technical data

Product properties

Product type	Crimp contact
Contact material type	turned

Connection data

Connection method	Crimp connection
Contact connection type	Socket
Conductor cross section	0.08 mm² ... 0.25 mm²

Material specifications

Contact surface	Nickel-plated (Ni), with gold coating (Au)
Contact material	CuZn

Dimensions

Mechanical characteristics

Contact diameter	0.8 mm

Mechanical properties

Mechanical data

Insertion/withdrawal cycles	100

Drawings

Dimensional drawing

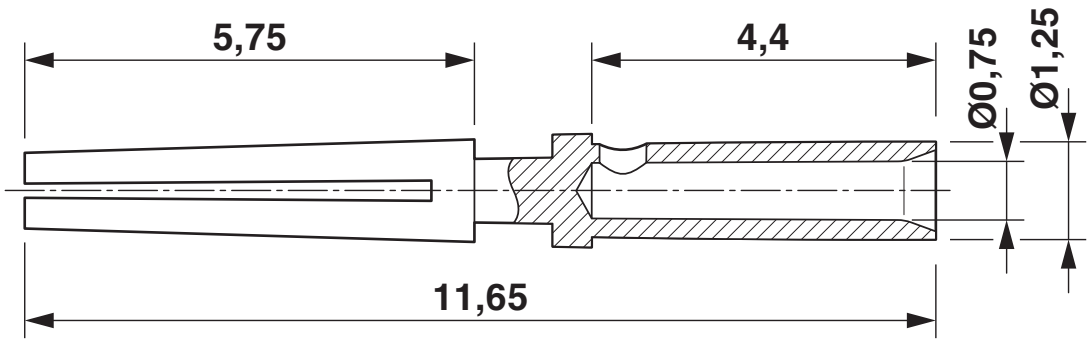

Dimensional drawing

Classifications

ECLASS

ECLASS-11.0	27440204
ECLASS-12.0	27440204
ECLASS-13.0	27440204

ETIM

ETIM 9.0	EC000796

UNSPSC

UNSPSC 21.0	39121500

Environmental product compliance

EU RoHS

Fulfills EU RoHS substance requirements	Yes
Exemption	6(c)

China RoHS

Environment friendly use period (EFUP)	EFUP-50
	An article-related China RoHS declaration table can be found in the download area for the respective article under "Manufacturer declaration". For all articles with EFUP-E, no China RoHS declaration table issued and required.

EU REACH SVHC

REACH candidate substance (CAS No.)	Lead(CAS: 7439-92-1)
SCIP	7748a3cb-3211-4d48-a53d-b241681e78a7

Accessories

SF-Z0054 - Crimping pliers with digital display

1615585

https://www.phoenixcontact.com/us/products/1615585



Crimping pliers for turned crimp contacts Ø 0.6 mm / Ø 0.8 mm / Ø 1 mm / Ø 2 mm, litz wire cross section of 0.06 mm^2 ... 2.5 mm^2

SF-Z0053 - Crimp locator

1615584

https://www.phoenixcontact.com/us/products/1615584



Locator for RC-Z2514 and RC-Z2504 crimping pliers, for crimping turned SF and ST contacts, diameter of 0.6 mm ... 1.0 mm and 2.0 mm.

Phoenix Contact 2024 © - all rights reserved
https://www.phoenixcontact.com

Phoenix Contact USA
586 Fulling Mill Road
Middletown, PA 17057, United States
(+717) 944-1300
info@phoenixcon.com