GlobTek, Inc. www.globtek.com 186 Veterans Drive, Northvale, NJ 07647 Tel. (201) 784-1000 Fax (201) 784-0111	Drawing Title: U261-241N-4BC2SS / 5A USB 3.1 1 260℃ Sink board 24 Male -40℃~+85℃ Gold Copper Alloy Type-C SMD USB Connectors ROHS	
	Model No. Connector	
	Part No./Ordering No. PLUG-USBC-241SMT-4BC2SS	Rev A1

In Addition to GlobTek Inc.'s renewed ISO9001:2008 - Quality Management System Certification, GlobTek Inc. is now certified to:

ISO13485:2003 - Medical Devices Quality Management System Certification
ISO14001:2004 - Environmental Management System Certification

ISO Certificates are available online at http://www.globtek.com/iso-certificates/

The acceptance of this specification and use of the product described in this document indicates the acceptance and binding of the customer to Globtek TERMS AND CONDITIONS (attached to the end of this document), which supersede all other agreements, terms, and conditions (http://www.globtek.com/terms-and-conditions/).
Prop 65 Statement:https://www.globtek.com/prop-65-statement.pdf

Footnote:

GlobTek Inc. will not be liable for the safety and performance of these power supplies if unauthorized access and repair occurs. End user should consult applicable UL, CSA or EN standards for proper installation instruction.

Limitation of Use:

GlobTek products are intended for use with commercial, medical, and/or industrial equipment only. GlobTek product are not authorized for use as mission critical components in life support hazardous environment, nuclear or aircraft applications without prior written approval from the CEO of GlobTek Inc.
Contents of this document are subject to change without prior notice.

Customer Approval of Specification:

Please approve, sign and send back to GlobTek so we can complete order processing.
A delay in receipt of this form will delay delivery schedule.

Company Name:	Customer P/N:
Quote Number:	Date:
Authorized Representative Name:	Authorized Representative Signature:

PROPRIETARY INFORMATION
PROPRIETARY OF GLOBTEK, INC. ANY REPRODUCTION, DISCLOSURE OR USE OF THIS DRAWING, IN WHOLE OR IN PART, IS HEREBY PROHIBITED EXCEPT AS SPECIFIED IN WRITING BY GLOBTEK, INC. © GlobTek, Inc. 2022 - 2024
guest /06/26/2024 12:17:15 PM CLONED FROM PLUG-USBC-241SMTV-4BQC13

GlobTek, Inc.
www.globtek.com
186 Veterans Drive,
Northvale, NJ 07647
Tel. (201) 784-1000
Fax (201) 784-0111

Drawing Title: U261-241N-4BC2SS / 5A USB 3.1 1 260℃ Sink board 24 Male -40℃~+85℃ Gold Copper Alloy Type-C SMD USB Connectors ROHS	
Model No. Connector	
Part No./Ordering No. PLUG-USBC-241SMT-4BC2SS	Rev A1

REVISION HISTORY

REV	DESCRIPTION	SUB	DATE	APPROVED
A1	Update the box quantity information	QA	06/20/2024	QA
A	Initial release	QA	07/25/2022	QA

3D CAD FILE:
https://www.globtek.com/file/dl/PLUG-USBC-241SMT-4BC2SS.zip

AGENCY ONLINE DOCUMENTS

RoHS/RoHS3 Declaration	https://www.globtek.com/pdf/rohs_cert/01t3a000005hSXmAAM
REACH Declaration	https://www.globtek.com/pdf/iso_certificates/REACH.pdf
Conflict Minerals Declaration	https://www.globtek.com/pdf/conflict-minerals.pdf
Prop 65 Statement	https://en.globtek.com/prop-65-statement.pdf

IPXY rating is based on 3rd party testing and customers should check suitability and test system level IPXY rating before ordering.

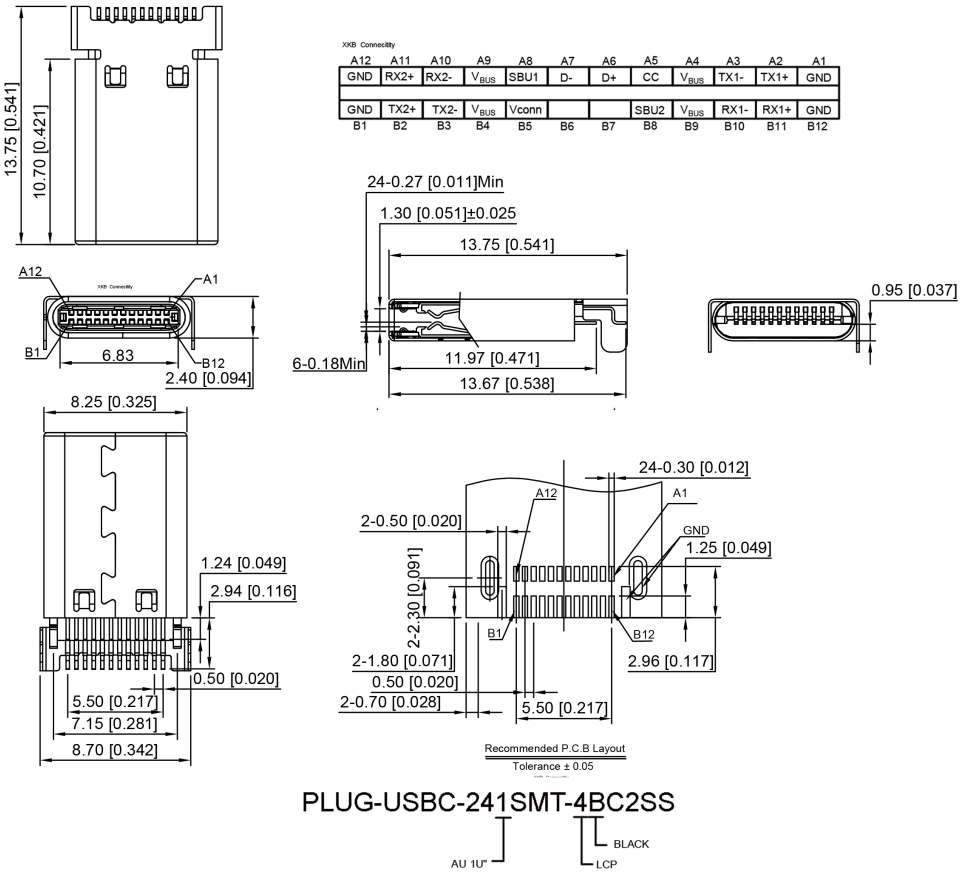

PLUG-USBC-241SMT-4BC2SS

AU 1U"
BLACK
LCP

PROPRIETARY INFORMATION
PROPRIETARY OF GLOBTEK, INC. ANY REPRODUCTION, DISCLOSURE OR USE OF THIS DRAWING, IN WHOLE OR IN PART, IS HEREBY PROHIBITED EXCEPT AS SPECIFIED IN WRITING BY GLOBTEK, INC. © GlobTek, Inc. 2022 - 2024
guest /06/26/2024 12:17:15 PM CLONED FROM PLUG-USBC-241SMTV-4BQC13

GlobTek, Inc.
www.globtek.com
186 Veterans Drive,
Northvale, NJ 07647
Tel. (201) 784-1000
Fax (201) 784-0111

Drawing Title: U261-241N-4BC2SS / 5A USB 3.1 1 260℃ Sink board 24 Male -40℃~+85℃ Gold Copper Alloy Type-C SMD USB Connectors ROHS	
Model No. Connector	
Part No./Ordering No. PLUG-USBC-241SMT-4BC2SS	Rev A1

NOTE:
1. MATERIAL:
1.1 INSULATOR: HIGH TEMPERATURE PLASTIC UL 94 V-0;
1.2 CONTACT: COPPER ALLOY(T=0.15mm)
1.3 SHELL: STEEL(T=0.15mm)
2. ELECTRICAL CHARACTERISTICS;
2.1 CONTACT RESISTANCE: 40mΩ Max FOR INITIAL. 10mΩ
CHANGE AFTER TEST. MEASURE AT 20mV, 100mA.
2.2 CONTACT CURRENT RATING: 5A Max FOR VBUS/GND PIN; 0.9A Max
FOR Other PIN.
2.3 DIELECTRIC WITHSTANDING VOLTAGE: 100V AC R.M.S.
2.4 INSULATION RESISTANCE 100MΩ Min
2.5 OPERATING TEMPERATURE: -40°C~85°C
3 MECHANICAL CHARACTERISTICS:
3.1 MATING FORCE: 5~20 N.
3.2 UNMATED FORCE: 6~20N AFTER TEST
3.3 DURABILITY: 10,000 CYCLES, 500 CYCLES/H
4.PLATING
CONTACT: CONTACT AREA PLATING Au 1~30u" ,SOLDER AREA PLATING 80~120U"
MATTING Sn.
SHELL/SPRING/BUCKLE:20U" Min PLATING OVER ALL

Temperature Life, Vibration, Cyclic Temperature and Humidity, Thermal Shock, Mixed Flowing Gas and etc.:

https://www.globtek.com/pdf/ENVIRONMENTAL.pdf

PROPRIETARY INFORMATION
PROPRIETARY OF GLOBTEK, INC. ANY REPRODUCTION, DISCLOSURE OR USE OF THIS DRAWING, IN WHOLE OR IN PART, IS HEREBY PROHIBITED EXCEPT AS SPECIFIED IN WRITING BY GLOBTEK, INC. © GlobTek, Inc. 2022 - 2024
guest /06/26/2024 12:17:15 PM CLONED FROM PLUG-USBC-241SMTV-4BQC13

GlobTek, Inc. www.globtek.com 186 Veterans Drive, Northvale, NJ 07647 Tel. (201) 784-1000 Fax (201) 784-0111	Drawing Title: U261-241N-4BC2SS / 5A USB 3.1 1 260℃ Sink board 24 Male -40℃~+85℃ Gold Copper Alloy Type-C SMD USB Connectors ROHS	
	Model No. Connector	
	Part No./Ordering No. PLUG-USBC-241SMT-4BC2SS	Rev A1

Packing:

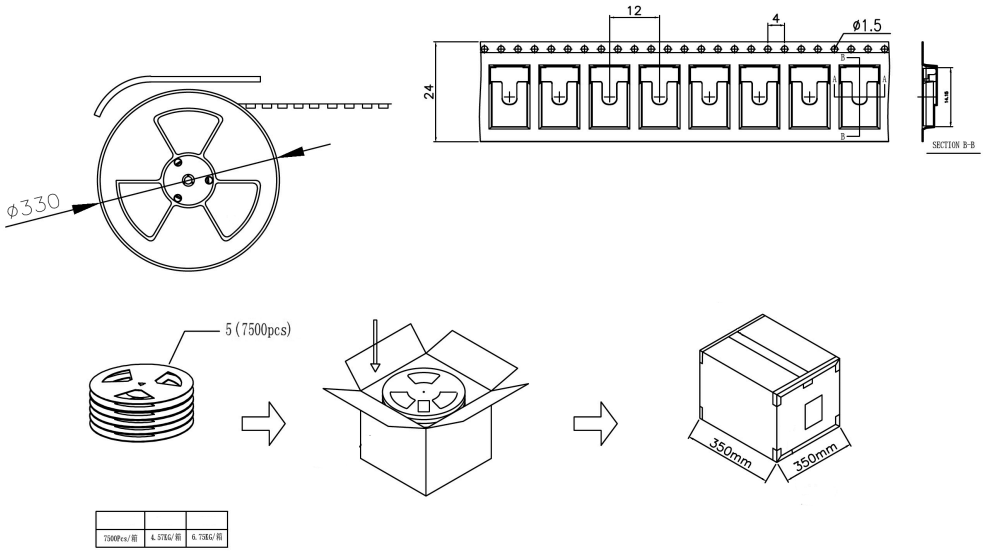

PROPRIETARY INFORMATION
PROPRIETARY OF GLOBTEK, INC. ANY REPRODUCTION, DISCLOSURE OR USE OF THIS DRAWING, IN WHOLE OR IN PART, IS HEREBY PROHIBITED EXCEPT AS SPECIFIED IN WRITING BY GLOBTEK, INC. © GlobTek, Inc. 2022 - 2024
guest /06/26/2024 12:17:15 PM CLONED FROM PLUG-USBC-241SMTV-4BQC13

GlobTek, Inc.
www.globtek.com
186 Veterans Drive,
Northvale, NJ 07647
Tel. (201) 784-1000
Fax (201) 784-0111

Drawing Title: U261-241N-4BC2SS / 5A USB 3.1 1 260℃ Sink board 24 Male -40℃~+85℃ Gold Copper Alloy Type-C SMD USB Connectors ROHS	
Model No. Connector	
Part No./Ordering No. PLUG-USBC-241SMT-4BC2SS	Rev A1

PACKAGING

Packing Spec P/N:	
Box Qty:	1500
Gift Box Size (mm):	
Gift Box Color:	White
Master Carton Size (mm):	350 x 350 x 220
Master Carton Cubic Volume (m^3):	0.03
Master GW (Kg):	6.8 kg
wt Ea. (Kg):	0.00 kg
wt Ea. (Kg):	0.01 kg
LABEL SPECS: ,	
PACK SPEC:	

PROPRIETARY INFORMATION
PROPRIETARY OF GLOBTEK, INC. ANY REPRODUCTION, DISCLOSURE OR USE OF THIS DRAWING, IN WHOLE OR IN PART, IS HEREBY PROHIBITED EXCEPT AS SPECIFIED IN WRITING BY GLOBTEK, INC. © GlobTek, Inc. 2022 - 2024
guest /06/26/2024 12:17:15 PM CLONED FROM PLUG-USBC-241SMTV-4BQC13