CUI Devices is now Same Sky! Learn More

SERIES: SJ-6304 | DESCRIPTION: AUDIO JACK

FEATURES

- through hole
- right angle
- 3 conductor
- 2 isolated switches
- DPDT switches in SJ-63043F
- threaded with nut



RoHS

PART NUMBER KEY

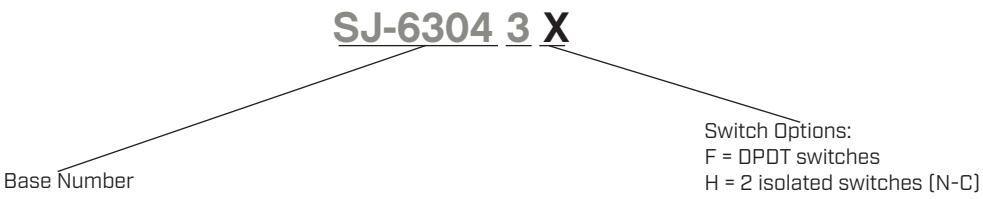

SPECIFICATIONS

parameter	conditions/description	min	typ	max	units
rated input voltage			12		Vdc
rated input current				1	A
contact resistance	between terminal and mating plug			30	mΩ
insulation resistance	at 500 Vdc	100			MΩ
voltage withstand	for 1 minute			500	Vac
insertion/withdrawal force		0.4		3	kg
operating temperature		-25		70	°C
life			5,000		cycles
flammability rating	see material table				
RoHS	yes				

SOLDERABILITY

parameter	conditions/description	min	typ	max	units
hand soldering	for 3~5 seconds		360		°C

MECHANICAL DRAWING

units: mm
tolerance: ±0.3 mm

ITEM	DESCRIPTION	MATERIAL	PLATING/COLOR
1	earth terminal	phosphor bronze	silver
2	tip spring	phosphor bronze	silver
3	ring spring	phosphor bronze	silver
4	break terminal	brass	silver
5	transfer terminal	phosphor bronze	silver
6	make terminal	phosphor bronze	silver
7	break terminal	brass	silver
8	transfer terminal	phosphor bronze	silver
9	make terminal	phosphor bronze	silver
10	insulator	POM (UL94HB)	black
11	housing	PBT (UL94V-0)	black
12	cover	PC (UL94V-2)	transparent
13	nut	steel	nickel
14	washer	steel	nickel
15	spring	SWP	

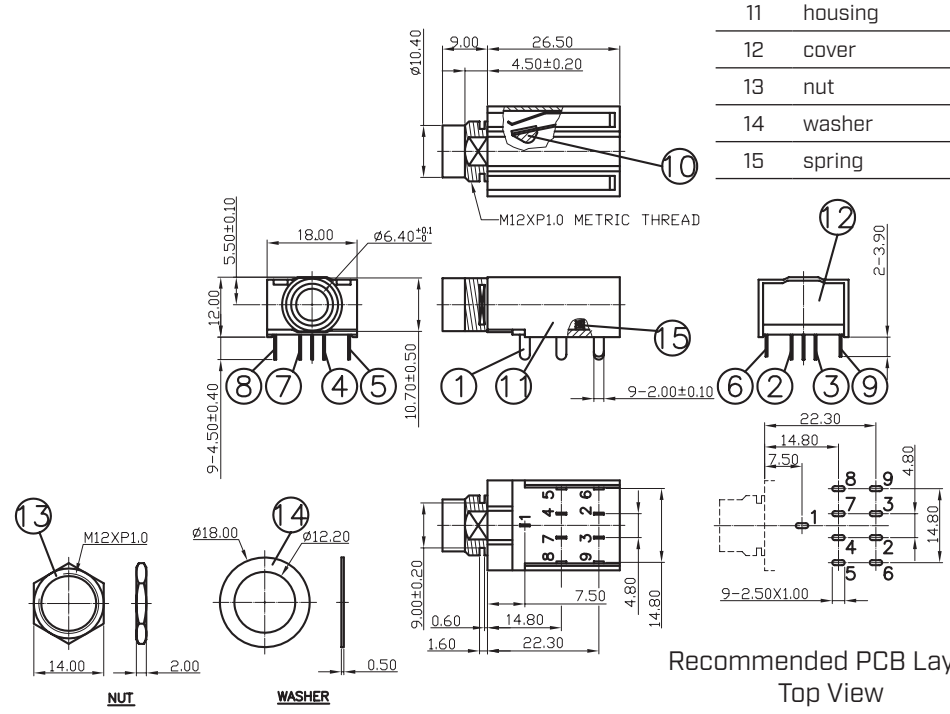

Recommended PCB Layout
Top View

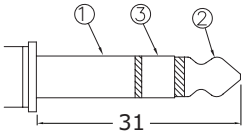

Ø6.35 MATING PLUG

Model No.	SJ-63043F	SJ-63043H
Schematic		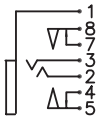
PIN		
1	sleeve	sleeve
2	tip	tip
3	ring	ring
4	isolated break terminal 1	isolated break terminal 1
5	isolated transfer terminal 1	isolated transfer terminal 1
6	isolated make terminal 1	NP
7	isolated break terminal 2	isolated break terminal 2
8	isolated transfer terminal 2	isolated transfer terminal 2
9	isolated make terminal 2	NP

REVISION HISTORY

rev.	description	date
1.0	initial release	08/11/2020
1.01	logo, datasheet style update	08/16/2022
1.02	CUI Devices rebranded to Same Sky	09/12/2024

The revision history provided is for informational purposes only and is believed to be accurate.

same sky

Same Sky offers a one (1) year limited warranty. Complete warranty information is listed on our website.

Same Sky reserves the right to make changes to the product at any time without notice. Information provided by Same Sky is believed to be accurate and reliable. However, no responsibility is assumed by Same Sky for its use, nor for any infringements of patents or other rights of third parties which may result from its use.

Same Sky products are not authorized or warranted for use as critical components in equipment that requires an extremely high level of reliability. A critical component is any component of a life support device or system whose failure to perform can be reasonably expected to cause the failure of the life support device or system, or to affect its safety or effectiveness.

sameskydevices.com