Data sheet



RZT7-03ZRS-KWB

RZT7

CYLINDER SENSORS

SICK
Sensor Intelligence.

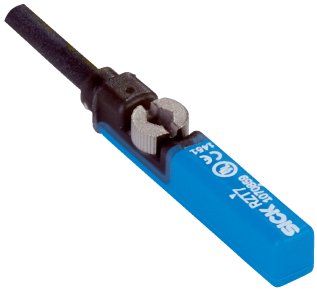

Ordering information

Type	part no.
RZT7-03ZRS-KWB	1070853

Other models and accessories ➜ www.sick.com/RZT7

Detailed technical data

Features

Cylinder type	T-slot
Cylinder types with adapter	Profile cylinder Tie rod cylinder Round body cylinder Dovetail groove cylinder SMC rail CDQ2 SMC rail ECDQ2
Housing length	29.5 mm
Switching output	Reed
Switching frequency	400 Hz
Output function	NO
Electrical wiring	AC/DC 3-wire
Enclosure rating	IP65 [1] IP67

[1] According to EN 60529.

Mechanics/electronics

Supply voltage	5 V AC/DC ... 30 V AC/DC
Voltage drop	≤ 0.1 V [1]
Continuous current I_a	≤ 500 mA [2] ≤ 300 mA [3]
Switching capacity	≤ 6 W
Protection class	III
Response sensitivity, typ.	3 mT
Overrun distance, typ.	10 mm

[1] For cable length up to 0.3 m.
[2] DC.
[3] AC.
[4] Supply voltage U_B and constant ambient temperature Ta.

Reproducibility	≤ 0.1 mT [4]
Reverse polarity protection	Yes
Status indicator LED	Yes
Teach-in	No
Ambient operating temperature	–30 °C ... +70 °C
Shock and vibration resistance	30 g, 11 ms / 10 ... 55 Hz, 1 mm
EMC	According to EN 60947-5-2
Connection type	Cable, 3-wire, stripped, 5 m
Connection type Detail	
Conductor cross section	0.12 mm²
Cable diameter	Ø 2.9 mm
Bending radius	With fixed installation > 10 x cable diameter
	For flexible use > 15 x cable diameter
Cable outlet	Axial
Material	
Housing	Plastic, Grilamid LVX-65H SST
Cable	PVC
UL File No.	NRKH.E181493 & NRKH7.E181493

[1] For cable length up to 0.3 m.
[2] DC.
[3] AC.
[4] Supply voltage U_B and constant ambient temperature Ta.

Safety-related parameters

$MTTF_D$	41,230 years
DC_{avg}	0 %
T_M (mission time)	20 years
B_{10D}	10,000,000 Switching cycles [1]

[1] Only for devices containing electro-mechanical components. In this case, the $MTTF_D$ value of the entire device must be calculated from the given B_{10D} value, the number of switching cycles and the given $MTTF_D$ value.

Certificates

EU declaration of conformity	✓
UK declaration of conformity	✓
ACMA declaration of conformity	✓
Moroccan declaration of conformity	✓
China-RoHS	✓
cULus certificate	✓

Classifications

ECLASS 5.0	27270104
ECLASS 5.1.4	27270104
ECLASS 6.0	27270104
ECLASS 6.2	27270104

ECLASS 7.0	27270104
ECLASS 8.0	27270104
ECLASS 8.1	27270104
ECLASS 9.0	27270104
ECLASS 10.0	27270104
ECLASS 11.0	27270104
ECLASS 12.0	27274301
ETIM 5.0	EC002544
ETIM 6.0	EC002544
ETIM 7.0	EC002544
ETIM 8.0	EC002544
UNSPSC 16.0901	39122230

Installation note

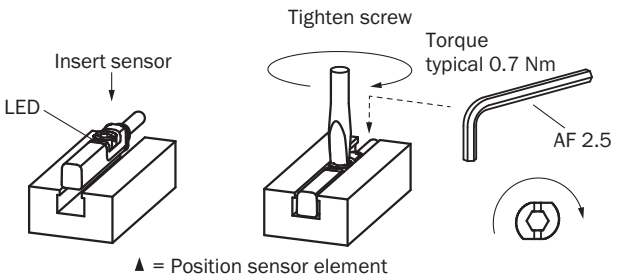

Connection diagram Cd-035

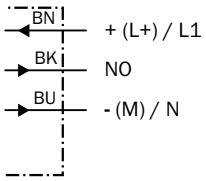

Dimensional drawing Cable

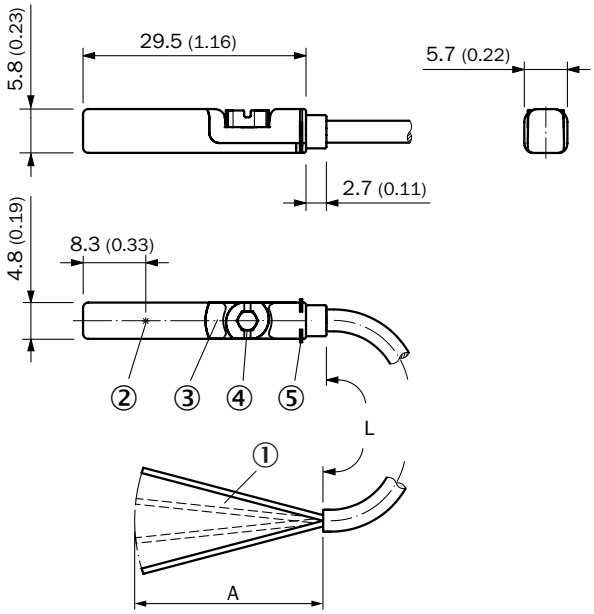

Dimensions in mm (inch)
① Connection
② Position sensor element
③ Display LED
④ Fixing screw SW 2.5
⑤ retaining ribs

		L	A	
1070861	RZT7-03ZUS-KU0	2 m	31.5	2
1070865	RZT7-03ZUS-KW0	2 m	31.5	2
1070850	RZT7-03ZRS-KU0	2 m	31.5	3
1070852	RZT7-03ZRS-KW0	2 m	31.5	3
1070863	RZT7-03ZUS-KUB	5 m	31.5	2
1070867	RZT7-03ZUS-KWB	5 m	31.5	2
1070851	RZT7-03ZRS-KUB	5 m	31.5	3
1070853	RZT7-03ZRS-KWB	5 m	31.5	3
1070854	RZT7-03ZRS-KWD	10 m	31.5	3

Recommended accessories

Other models and accessories ➜ www.sick.com/RZT7

	Brief description	Type	part no.
Mounting systems			
	• **Description:** Mounting bracket on round body cylinder with piston diameter of 8 mm ... 130 mm, ambient temperature min –30 °C max 80 °C • **Material:** Stainless steel, Zinc cast • **Details:** Stainless steel, Zinc cast • **Packing unit:** 1 piece • **Suitable for:** T-slot	BEF-KHZ-RT1-130	2077684
	• **Description:** Mounting bracket on round body cylinder with piston diameter of 8 mm ... 25 mm, ambient temperature min –30 °C max 80 °C • **Material:** Stainless steel, Zinc cast • **Details:** Stainless steel, Zinc cast • **Packing unit:** 1 piece • **Suitable for:** T-slot	BEF-KHZ-RT1-25	2077682
	• **Description:** Mounting bracket on round body cylinder with piston diameter of 8 mm ... 63 mm, ambient temperature min –30 °C max 80 °C • **Material:** Stainless steel, Zinc cast • **Details:** Stainless steel, Zinc cast • **Packing unit:** 1 piece • **Suitable for:** T-slot	BEF-KHZ-RT1-63	2077683
	• **Description:** Mounting bracket on round body cylinder with piston diameter of 12 mm, ambient temperature min 0 °C max 50 °C • **Dimensions (W x H x L):** 22.4 m • **Material:** Plastic, Aluminum • **Details:** Plastic, Aluminum • **Packing unit:** 1 piece • **Suitable for:** T-slot	BEF-KHZ-RT-12	2077681
	• **Description:** Mounting bracket on round body cylinder with piston diameter of 16 mm, ambient temperature min 0 °C max 50 °C • **Dimensions (W x H x L):** 26.6 m • **Material:** Plastic, Aluminum • **Details:** Plastic, Aluminum • **Packing unit:** 1 piece • **Suitable for:** T-slot	BEF-KHZ-RT-16	2077680
	• **Description:** Mounting bracket on round body cylinder with piston diameter of 20 mm, ambient temperature min 0 °C max 50 °C • **Dimensions (W x H x L):** 30.6 m • **Material:** Plastic, Aluminum • **Details:** Plastic, Aluminum • **Packing unit:** 1 piece • **Suitable for:** T-slot	BEF-KHZ-RT-20	2077679
	• **Description:** Mounting bracket on round body cylinder with piston diameter of 25 mm, ambient temperature min 0 °C max 50 °C • **Dimensions (W x H x L):** 35.7 m • **Material:** Plastic, Aluminum • **Details:** Plastic, Aluminum • **Packing unit:** 1 piece • **Suitable for:** T-slot	BEF-KHZ-RT-25	2077678
	• **Description:** Mounting bracket on round body cylinder with piston diameter of 32 mm, ambient temperature min 0 °C max 50 °C • **Dimensions (W x H x L):** 42.9 m • **Material:** Plastic, Aluminum • **Details:** Plastic, Aluminum • **Packing unit:** 1 piece • **Suitable for:** T-slot	BEF-KHZ-RT-32	2077677
	• **Description:** Mounting bracket on round body cylinder with piston diameter of 40 mm, ambient temperature min 0 °C max 50 °C • **Dimensions (W x H x L):** 50.9 m • **Material:** Plastic, Aluminum • **Details:** Plastic, Aluminum • **Packing unit:** 1 piece	BEF-KHZ-RT-40	2077676

	Brief description	Type	part no.
	• **Suitable for:** T-slot		
	• **Description:** Mounting bracket on round body cylinder with piston diameter of 50 mm, ambient temperature min 0 °C max 50 °C • **Dimensions (W x H x L):** 61.8 m • **Material:** Plastic, Aluminum • **Details:** Plastic, Aluminum • **Packing unit:** 1 piece • **Suitable for:** T-slot	BEF-KHZ-RT-50	2077675
	• **Description:** Mounting bracket on round body cylinder with piston diameter of 63 mm, ambient temperature min 0 °C max 50 °C • **Dimensions (W x H x L):** 73.9 m • **Material:** Plastic, Aluminum • **Details:** Plastic, Aluminum • **Packing unit:** 1 piece • **Suitable for:** T-slot	BEF-KHZ-RT-63	2077674
	• **Description:** Mounting bracket for integrated profile cylinder/tie-rod cylinder • **Material:** Zinc diecast • **Details:** Zinc diecast • **Items supplied:** Mounting hardware included	BEF-KHZ-PT1	2022702
	• **Description:** Mounting bracket for mounting on SMC rails ECDQ2 (T-slot) • **Material:** Aluminum • **Details:** Aluminum • **Items supplied:** Without mounting hardware	BEF-KHZ-TT1	2046439
	• **Description:** Mounting bracket for mounting on SMC rails CDQ2 (T-slot) • **Material:** Aluminum • **Details:** Aluminum • **Items supplied:** Without mounting hardware	BEF-KHZ-TT2	2046440
	• **Description:** Mounting bracket for cylinder with dovetail slot • **Material:** Aluminum • **Details:** Aluminum • **Items supplied:** Without mounting hardware	BEF-KHZ-ST1	2022703
device protection and care			
	• **Description:** Protective adapter • **Material:** Zinc diecast • **Items supplied:** Mounting hardware included • **Suitable for:** MZT7, RZT7, MZT8	BEF-SG-MRZT	2077201

SICK AT A GLANCE

SICK is one of the leading manufacturers of intelligent sensors and sensor solutions for industrial applications. A unique range of products and services creates the perfect basis for controlling processes securely and efficiently, protecting individuals from accidents and preventing damage to the environment.

We have extensive experience in a wide range of industries and understand their processes and requirements. With intelligent sensors, we can deliver exactly what our customers need. In application centers in Europe, Asia and North America, system solutions are tested and optimized in accordance with customer specifications. All this makes us a reliable supplier and development partner.

Comprehensive services complete our offering: SICK LifeTime Services provide support throughout the machine life cycle and ensure safety and productivity.

For us, that is “Sensor Intelligence.”

WORLDWIDE PRESENCE:

Contacts and other locations –www.sick.com