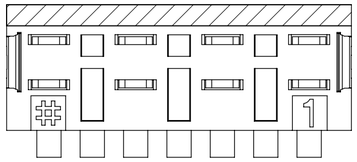

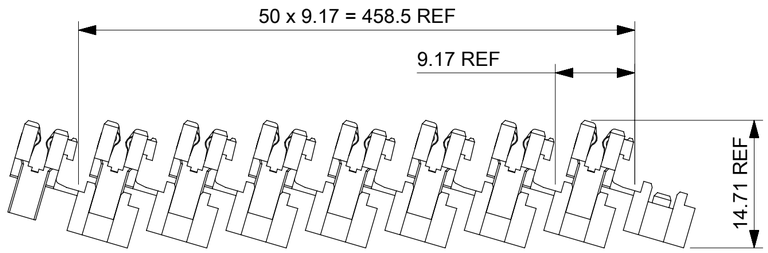

SHIPPING ARRANGEMENT

CCT	A	B
2	5.0	9.9
3	10.0	14.9
4	15.0	19.9
5	20.0	24.9
6	25.0	29.9
7	30.0	34.9
8	35.0	39.9

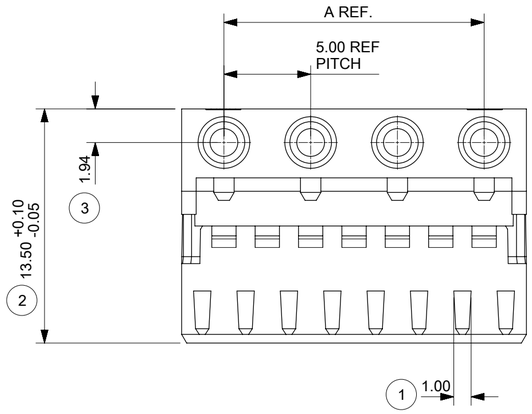

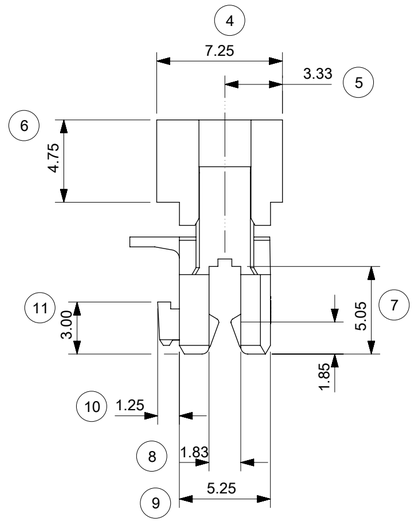

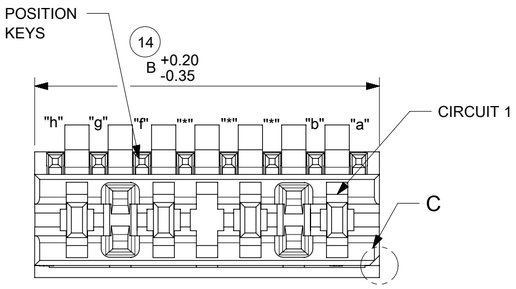

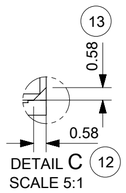

NOTES:
1. REFER TO PRODUCT SPECIFICATION: PS-93270-001.
2. MATERIAL: HOUSING - PA6 GF
UL94-V2, COLOUR: NATURAL.
TERMINAL: COPPER ALLOY 0.30 REF. THICK - PLATING
HOT TIN DIP.
3. COLOUR STRIPE IS OPTIONAL. AVAILABLE IN THE FOLLOWING
COLOURS: YELLOW, RED, GREEN, BLUE, BLACK & ORANGE.
4. REFER TO PACKAGING SPEC (PK-93270-001)
5. REFER TO APPLICATION SPEC (AS-93270-001)
LAST INSPECTION NUMBER : 14

DOCUMENT STATUS	P1	RELEASE DATE	2025/06/02 10:41:40

THIS DRAWING CONTAINS INFORMATION THAT IS PROPRIETARY TO MOLEX ELECTRONIC TECHNOLOGIES, LLC AND SHOULD NOT BE USED WITHOUT WRITTEN PERMISSION

DIMENSION UNITS	SCALE
mm	20:1

GENERAL TOLERANCES (UNLESS SPECIFIED)

ANGULAR TOL	±	0.5 °
4 PLACES	±	
3 PLACES	±	0.05
2 PLACES	±	0.1
1 PLACE	±	0.2
0 PLACES	±	

DRAFT WHERE APPLICABLE MUST REMAIN WITHIN DIMENSIONS

CURRENT REV DESC:

EC NO: 821743
DRWN: GOPIS 2024/08/20
CHK'D: PRAMOD 2025/05/14
APPR: GANESY 2025/06/02

INITIAL REVISION:
DRWN: MBN02 2022/05/09
APPR: MRAMAKRISHNA 2023/02/08

molex

R POWER 10 A, 0.75MM2
5MM TERMINAL PITCH (MATL: NYLON PA6)

PRODUCT CUSTOMER DRAWING

DOCUMENT NUMBER	DOC TYPE	DOC PART	REVISION
2203300001	PSD	000	A5

THIRD ANGLE PROJECTION	DRAWING	SERIES	MATERIAL NUMBER	CUSTOMER	SHEET NUMBER
	A2-SIZE	220330	SEE TABLE	GENERAL MARKET	1 OF 9

SINGLE ROW CODING KEYS OPEN
END WALLS WITH LATCHES

END WALLS OPEN	
FIRST END WALL	LAST END WALL
OPEN	OPEN

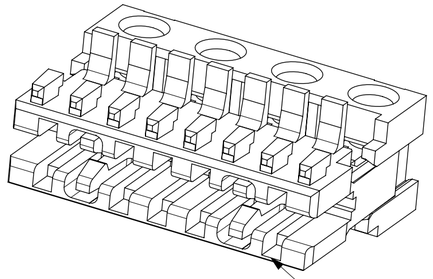

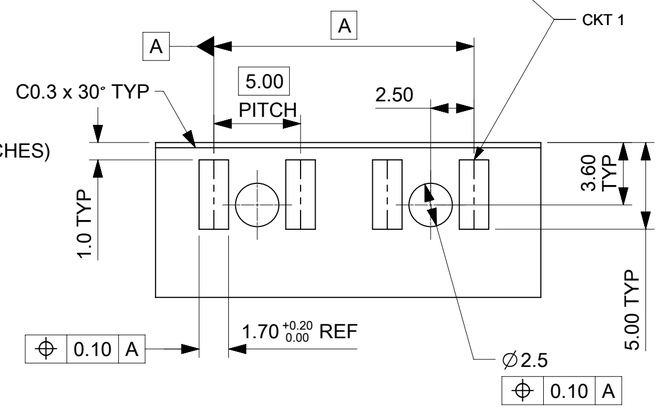

- PCB LAYOUT FOR 4CCT CONNECTOR
  (WITH NO OPTIONAL POSITIONAL RIB SLOT)
  (WITH HOLES FOR OPTIONAL INTERNAL LATCHES)
- RECOMMENDED PCB THICKNESS 1.5±0.14

SINGLE ROW CODING KEYS OPTION A
END WALLS WITH POLARIZING RIBS

OPTION A END WALLS	
FIRST END WALL	LAST END WALL
SHORT	CLOSED

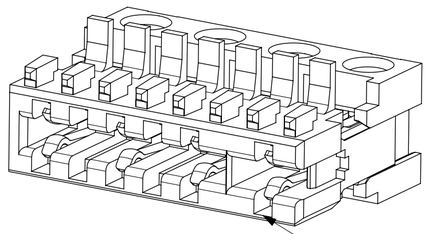

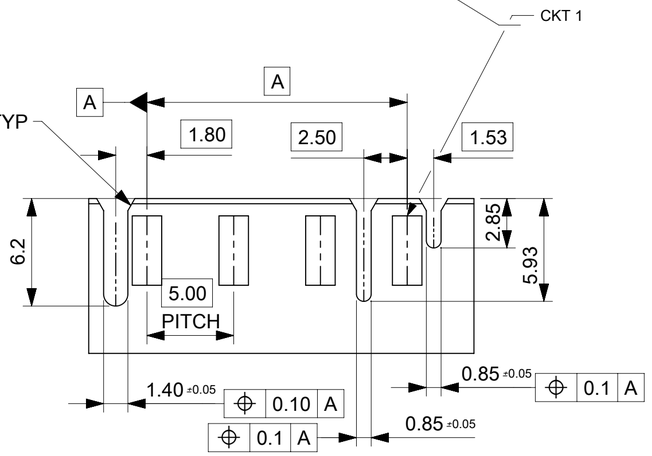

- PCB LAYOUT FOR 4CCT CONNECTOR
  (WITH OPTIONAL POSITIONAL RIB SLOT
  BETWEEN CCTS 1&2)
- RECOMMENDED PCB THICKNESS 1.5±0.14

2 ROW CODING KEYS OPTION B
END WALLS WITH POLARIZING RIBS

OPTION B END WALLS	
FIRST END WALL	LAST END WALL
CLOSED	SHORT

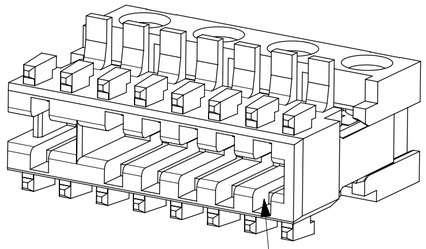

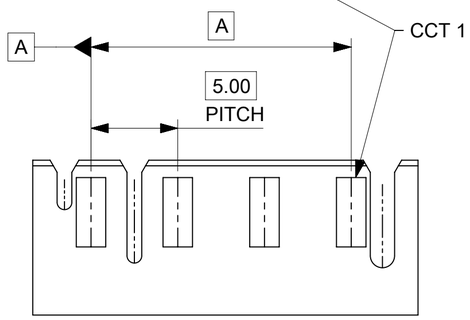

- PCB LAYOUT FOR 4CCT CONNECTOR
  (WITH OPTIONAL POSITIONAL RIB SLOT
  BETWEEN CCTS 3&4)
- RECOMMENDED PCB THICKNESS 1.5±0.14

1 ROW CODING KEYS OPTION C
END WALLS WITH POLARIZING RIBS

OPTION C END WALLS	
FIRST END WALL	LAST END WALL
OPEN	CLOSED

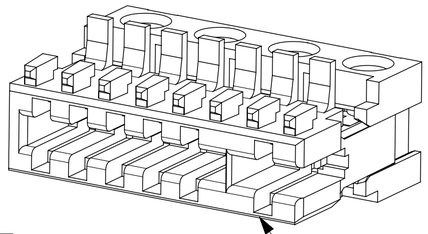

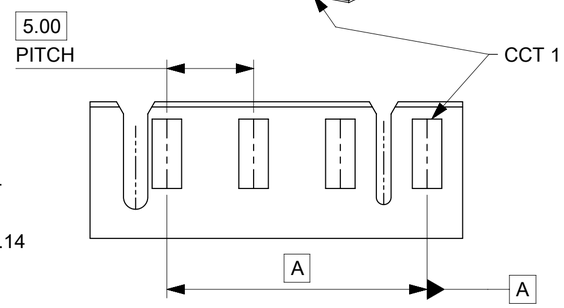

- PCB LAYOUT FOR 4CCT CONNECTOR
  (WITH OPTIONAL POSITIONAL RIB SLOT
  BETWEEN CCTS 1&2)
- RECOMMENDED PCB THICKNESS 1.5±0.14

NOTES:
1. ALL UNSPECIFIED DIMENSIONS SEE SHEET 1
2. PCB FEATURES WHEN USED ARE IDENTICAL IN SIZE AND POSITION ACROSS PCB OPTIONS
3. OPTIONS SHOWN ARE FOR REFERENCE ONLY, FOR PART CONFIGURATIONS SEE SHEETS 4-8
4. FOR PARTS NOT LISTED ON THIS DRAWING PLEASE CONTACT YOUR MOLEX SALES ENGINEER

THIS DRAWING CONTAINS INFORMATION THAT IS PROPRIETARY TO MOLEX ELECTRONIC TECHNOLOGIES, LLC AND SHOULD NOT BE USED WITHOUT WRITTEN PERMISSION

DIMENSION UNITS	SCALE
mm	1:1

GENERAL TOLERANCES (UNLESS SPECIFIED)

ANGULAR TOL	±	0.5 °
4 PLACES	±	
3 PLACES	±	0.05
2 PLACES	±	0.1
1 PLACE	±	0.2
0 PLACES	±	

DRAFT WHERE APPLICABLE MUST REMAIN WITHIN DIMENSIONS

CURRENT REV DESC:

EC NO: 821743
DRWN: GOPIS 2024/08/20
CHK'D: PRAMOD 2025/05/14
APPR: GANESY 2025/06/02

INITIAL REVISION:
DRWN: MBN02 2022/05/09
APPR: MRAMAKRISHNA 2023/02/08

THIRD ANGLE PROJECTION | DRAWING: A2-SIZE | SERIES: 220330

molex

R POWER 10 A, 0.75MM2
5MM TERMINAL PITCH (MATL: NYLON PA6)

PRODUCT CUSTOMER DRAWING

DOCUMENT NUMBER	DOC TYPE	DOC PART	REVISION
2203300001	PSD	000	A5

MATERIAL NUMBER	CUSTOMER	SHEET NUMBER
SEE TABLE	GENERAL MARKET	2 OF 9

DOCUMENT STATUS	P1	RELEASE DATE	2025/06/02 10:41:40

FORMAT: master-tb-prod-A2
REVISION: J1
DATE: 2021/05/01

1 ROW CODING KEYS OPTION D
END WALLS WITH POLARIZING RIBS

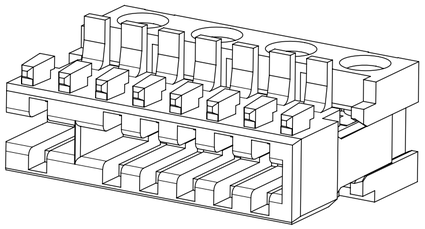

OPTION D END WALLS	
FIRST END WALL	LAST END WALL
CLOSED	OPEN

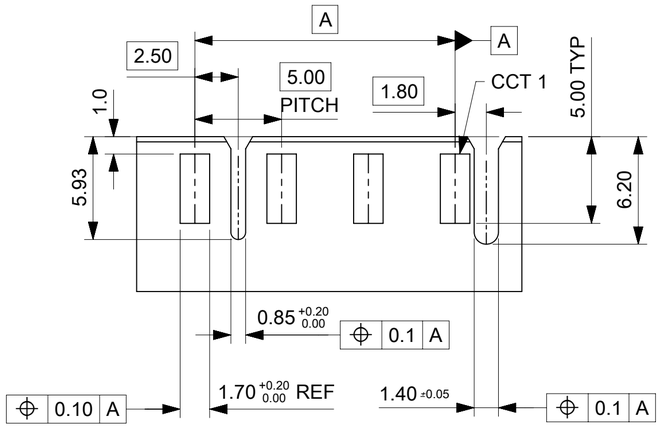

- PCB LAYOUT FOR 4CCT CONNECTOR
  (WITH OPTIONAL POSITIONAL RIB SLOT
  BETWEEN CCTS 3&4)
- RECOMMENDED PCB THICKNESS 1.5±0.14

1 ROW CODING KEYS
OPTION E END WALLS

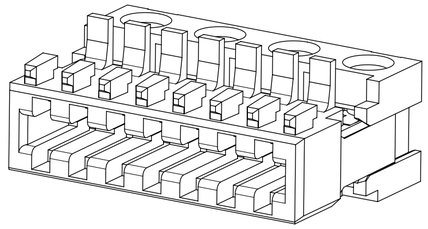

OPTION E END WALLS	
FIRST END WALL	LAST END WALL
CLOSED	CLOSED

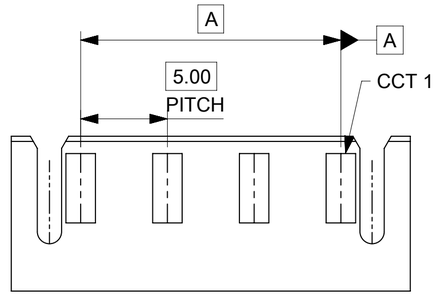

- PCB LAYOUT FOR 4CCT CONNECTOR
  (WITH NO OPTIONAL POSITIONAL RIB SLOTS)
- RECOMMENDED PCB THICKNESS 1.5±0.14

1 ROW CODING KEYS OPTION F
END WALLS WITH POLARIZING RIBS

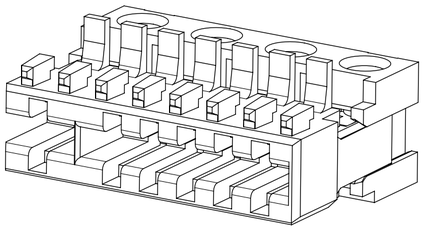

OPTION F END WALLS	
FIRST END WALL	LAST END WALL
NARROW FLUSH	OPEN

OPTION F: FIRST END NARROW FLUSH
LAST END WALL OPEN
SHOWN WITH SINGLE ROW CODING KEYS
RIB SHOWN BETWEEN CCTS 3&4

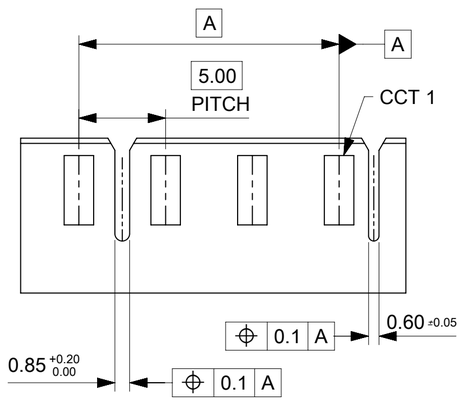

1 ROW CODING KEYS OPTION G
END WALLS WITH POLARIZING RIBS

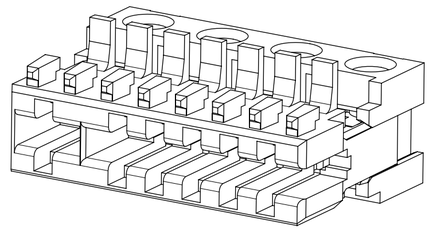

OPTION G END WALLS	
FIRST END WALL	LAST END WALL
OPEN	NARROW FLUSH

OPTION G: FIRST END OPEN
LAST END WALL NARROW FLUSH
SHOWN WITH SINGLE ROW CODING KEYS
RIB SHOWN BETWEEN CCTS 3&4

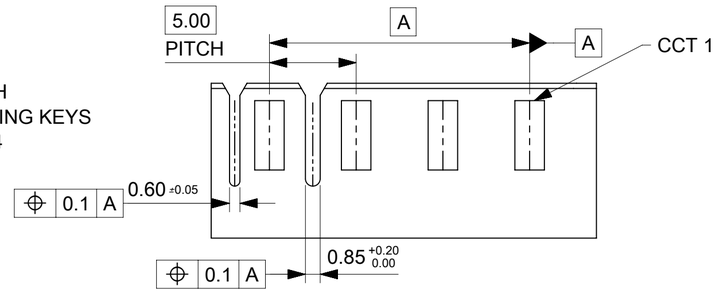

NOTES:
1. ALL UNSPECIFIED DIMENSIONS SEE SHEET 1
2. PCB FEATURES WHEN USED ARE IDENTICAL IN SIZE AND POSITION ACROSS PCB OPTIONS
3. OPTIONS SHOWN ARE FOR REFERENCE ONLY, FOR PART CONFIGURATIONS SEE SHEETS 4-8
4. FOR PARTS NOT LISTED ON THIS DRAWING PLEASE CONTACT YOUR MOLEX SALES ENGINEER

THIS DRAWING CONTAINS INFORMATION THAT IS PROPRIETARY TO MOLEX ELECTRONIC TECHNOLOGIES, LLC AND SHOULD NOT BE USED WITHOUT WRITTEN PERMISSION

DIMENSION UNITS	SCALE
mm	1:1

GENERAL TOLERANCES (UNLESS SPECIFIED)

ANGULAR TOL	±	0.5 °
4 PLACES	±	
3 PLACES	±	0.05
2 PLACES	±	0.1
1 PLACE	±	0.2
0 PLACES	±	

DRAFT WHERE APPLICABLE MUST REMAIN WITHIN DIMENSIONS

CURRENT REV DESC:

EC NO: 821743
DRWN: GOPIS 2024/08/20
CHK'D: PRAMOD 2025/05/14
APPR: GANESY 2025/06/02

INITIAL REVISION:
DRWN: MBN02 2022/05/09
APPR: MRAMAKRISHNA 2023/02/08

THIRD ANGLE PROJECTION | DRAWING: A2-SIZE | SERIES: 220330

molex

R POWER 10 A, 0.75MM2
5MM TERMINAL PITCH (MATL: NYLON PA6)

PRODUCT CUSTOMER DRAWING

DOCUMENT NUMBER	DOC TYPE	DOC PART	REVISION
2203300001	PSD	000	A5

MATERIAL NUMBER	CUSTOMER	SHEET NUMBER
SEE TABLE	GENERAL MARKET	3 OF 9

DOCUMENT STATUS	P1	RELEASE DATE	2025/06/02 10:41:40

FORMAT: master-tb-prod-A2
REVISION: J1
DATE: 2021/05/01

2 CIRCUIT

PART NUMBER	HOUSING USED	TERMINAL No.	TERMINAL VOID POSITION	REMOVED CODING KEYS	CONFIGURATION	LATCH BETWEEN	POLARIZING RIB BETWEEN	FIRST ENDWALL	LAST ENDWALL	COLOUR STRIPE
220330-0001	220329-0002	93268-0004	NONE	NONE	1 2	NONE	NONE	OPEN	OPEN	NONE
220330-0002	220383-2002	93268-0004	NONE	NONE	1 2	CCT 1 & 2	NONE	OPEN	OPEN	NONE
220330-0003 *	220384-7202	93268-0004	NONE	NONE	1 2	CCT 1 & 2	NONE	OPEN	OPEN	NONE

* SEE NOTE 3 (A5)

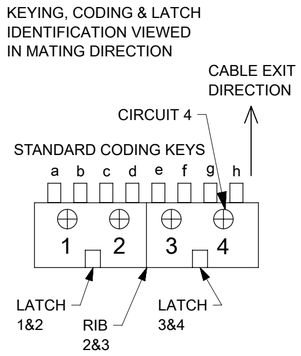

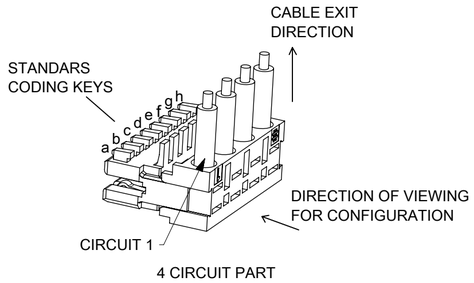

NOTES

1. DENOTES TERMINAL VOIDED POSITION
   DENOTES TERMINAL LOADED POSITION
   DENOTES POLARIZING RIB POSITION
2. MOLEX HOUSING NO. FOR REFERENCE ONLY
3. NOT TOOLED FOR 220330-0003 (A5)

THIS DRAWING CONTAINS INFORMATION THAT IS PROPRIETARY TO MOLEX ELECTRONIC TECHNOLOGIES, LLC AND SHOULD NOT BE USED WITHOUT WRITTEN PERMISSION

DIMENSION UNITS	SCALE
mm	1:1

GENERAL TOLERANCES (UNLESS SPECIFIED)

ANGULAR TOL	±	0.5 °
4 PLACES	±	
3 PLACES	±	0.05
2 PLACES	±	0.1
1 PLACE	±	0.2
0 PLACES	±	

DRAFT WHERE APPLICABLE MUST REMAIN WITHIN DIMENSIONS

CURRENT REV DESC:

EC NO: 821743
DRWN: GOPIS 2024/08/20
CHK'D: PRAMOD 2025/05/14
APPR: GANESY 2025/06/02

INITIAL REVISION:
DRWN: MBN02 2022/05/09
APPR: MRAMAKRISHNA 2023/02/08

molex

R POWER 10 A, 0.75MM2
5MM TERMINAL PITCH (MATL: NYLON PA6)

PRODUCT CUSTOMER DRAWING

DOCUMENT NUMBER	DOC TYPE	DOC PART	REVISION
2203300001	PSD	000	A5

THIRD ANGLE PROJECTION	DRAWING	SERIES	MATERIAL NUMBER	CUSTOMER	SHEET NUMBER
	A2-SIZE	220330	SEE TABLE	GENERAL MARKET	4 OF 9

DOCUMENT STATUS	P1	RELEASE DATE	2025/06/02 10:41:40

FORMAT: master-tb-prod-A2
REVISION: J1
DATE: 2021/05/01

3 CIRCUIT

PART NUMBER	HOUSING USED	TERMINAL No.	TERMINAL VOID POSITION	REMOVED CODING KEYS	CONFIGURATION	LATCH BETWEEN	POLARIZING RIB BETWEEN	FIRST ENDWALL	LAST ENDWALL	COLOUR STRIPE
220330-1001	220329-0003	93268-0004	NONE	NONE		NONE	NONE	OPEN	OPEN	NONE
220330-1011	220329-0003	93268-0004	NONE	a d e f		NONE	NONE	OPEN	OPEN	NONE
220330-1012	220383-2254	93268-0004	NONE	NONE	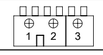	1&2	2&3	OPEN	NARROW FLUSH	NONE

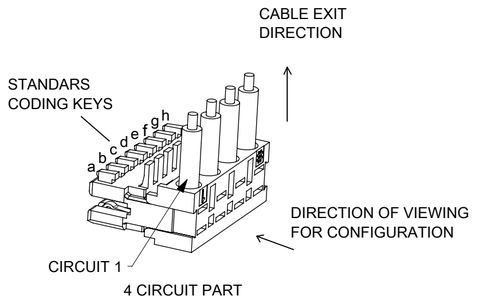

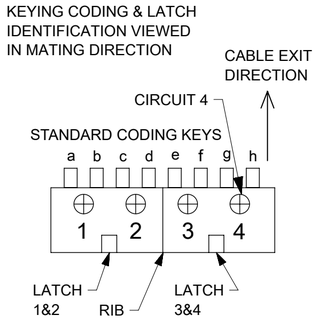

THIS DRAWING CONTAINS INFORMATION THAT IS PROPRIETARY TO MOLEX ELECTRONIC TECHNOLOGIES, LLC AND SHOULD NOT BE USED WITHOUT WRITTEN PERMISSION

DIMENSION UNITS	SCALE
mm	1:1

GENERAL TOLERANCES (UNLESS SPECIFIED)

ANGULAR TOL	±	0.5 °
4 PLACES	±	
3 PLACES	±	0.05
2 PLACES	±	0.1
1 PLACE	±	0.2
0 PLACES	±	

DRAFT WHERE APPLICABLE MUST REMAIN WITHIN DIMENSIONS

CURRENT REV DESC:

EC NO: 821743
DRWN: GOPIS 2024/08/20
CHK'D: PRAMOD 2025/05/14
APPR: GANESY 2025/06/02

INITIAL REVISION:
DRWN: MBN02 2022/05/09
APPR: MRAMAKRISHNA 2023/02/08

molex

R POWER 10 A, 0.75MM2
5MM TERMINAL PITCH (MATL: NYLON PA6)

PRODUCT CUSTOMER DRAWING

DOCUMENT NUMBER	DOC TYPE	DOC PART	REVISION
2203300001	PSD	000	A5

THIRD ANGLE PROJECTION	DRAWING	SERIES	MATERIAL NUMBER	CUSTOMER	SHEET NUMBER
	A2-SIZE	220330	SEE TABLE	GENERAL MARKET	5 OF 9

DOCUMENT STATUS	P1	RELEASE DATE	2025/06/02 10:41:40

FORMAT: master-lb-prod-A2
REVISION: J1
DATE: 2021/05/01

4 CIRCUIT

PART NUMBER	HOUSING USED	TERMINAL No.	TERMINAL VOID POSITION	REMOVED CODING KEYS	CONFIGURATION	LATCH BETWEEN	POLARIZING RIB BETWEEN	FIRST ENDWALL	LAST ENDWALL	COLOUR STRIPE
220330-2001	220329-0004	93268-0004	NONE	NONE	1 2 3 4	NONE	NONE	OPEN	OPEN	NONE

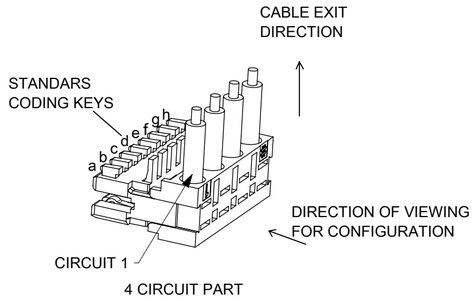

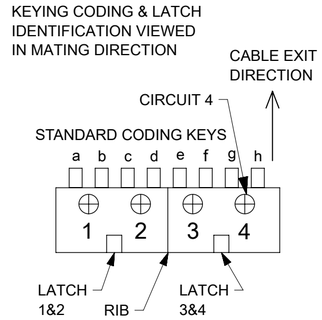

THIS DRAWING CONTAINS INFORMATION THAT IS PROPRIETARY TO MOLEX ELECTRONIC TECHNOLOGIES, LLC AND SHOULD NOT BE USED WITHOUT WRITTEN PERMISSION

DIMENSION UNITS	SCALE
mm	1:1

GENERAL TOLERANCES (UNLESS SPECIFIED)		
ANGULAR TOL	±	0.5 °
4 PLACES	±	
3 PLACES	±	0.05
2 PLACES	±	0.1
1 PLACE	±	0.2
0 PLACES	±	

DRAFT WHERE APPLICABLE MUST REMAIN WITHIN DIMENSIONS

CURRENT REV DESC:

EC NO: 821743
DRWN: GOPIS 2024/08/20
CHK'D: PRAMOD 2025/05/14
APPR: GANESY 2025/06/02

INITIAL REVISION:
DRWN: MBN02 2022/05/09
APPR: MRAMAKRISHNA 2023/02/08

molex

R POWER 10 A, 0.75MM2
5MM TERMINAL PITCH (MATL: NYLON PA6)

PRODUCT CUSTOMER DRAWING

DOCUMENT NUMBER	DOC TYPE	DOC PART	REVISION
2203300001	PSD	000	A5

THIRD ANGLE PROJECTION	DRAWING	SERIES	MATERIAL NUMBER	CUSTOMER	SHEET NUMBER
	A2-SIZE	220330	SEE TABLE	GENERAL MARKET	6 OF 9

DOCUMENT STATUS	P1	RELEASE DATE	2025/06/02 10:41:40

FORMAT: master-tb-prod-A2
REVISION: J1
DATE: 2021/05/01

5 CIRCUIT

PART NUMBER	HOUSING USED	TERMINAL No.	TERMINAL VOID POSITION	REMOVED CODING KEYS	CONFIGURATION	LATCH BETWEEN	POLARIZING RIB BETWEEN	FIRST ENDWALL	LAST ENDWALL	COLOUR STRIPE
220330-3001	220329-0005	93268-0004	NONE	NONE		NONE	NONE	OPEN	OPEN	NONE
220330-3002	220329-0305	93268-0004	NONE	NONE	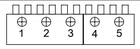	NONE	3 & 4	OPEN	OPEN	NONE

A5

THIS DRAWING CONTAINS INFORMATION THAT IS PROPRIETARY TO MOLEX ELECTRONIC TECHNOLOGIES, LLC AND SHOULD NOT BE USED WITHOUT WRITTEN PERMISSION

DIMENSION UNITS	SCALE
mm	1:1

GENERAL TOLERANCES (UNLESS SPECIFIED)		
ANGULAR TOL	±	0.5 °
4 PLACES	±	
3 PLACES	±	0.05
2 PLACES	±	0.1
1 PLACE	±	0.2
0 PLACES	±	

DRAFT WHERE APPLICABLE MUST REMAIN WITHIN DIMENSIONS

CURRENT REV DESC:

EC NO: 821743
DRWN: GOPIS 2024/08/20
CHK'D: PRAMOD 2025/05/14
APPR: GANESY 2025/06/02

INITIAL REVISION:
DRWN: MBN02 2022/05/09
APPR: MRAMAKRISHNA 2023/02/08

molex

R POWER 10 A, 0.75MM2
5MM TERMINAL PITCH (MATL: NYLON PA6)

PRODUCT CUSTOMER DRAWING

DOCUMENT NUMBER	DOC TYPE	DOC PART	REVISION
2203300001	PSD	000	A5

THIRD ANGLE PROJECTION	DRAWING	SERIES	MATERIAL NUMBER	CUSTOMER	SHEET NUMBER
	A2-SIZE	220330	SEE TABLE	GENERAL MARKET	7 OF 9

DOCUMENT STATUS	P1	RELEASE DATE	2025/06/02 10:41:40

FORMAT: master-tb-prod-A2
REVISION: J1
DATE: 2021/05/01

6 CIRCUIT

PART NUMBER	HOUSING USED	TERMINAL No.	TERMINAL VOID POSITION	REMOVED CODING KEYS	CONFIGURATION	LATCH BETWEEN	POLARIZING RIB BETWEEN	FIRST ENDWALL	LAST ENDWALL	COLOUR STRIPE
220330-4001	220329-0006	93268-0004	NONE	NONE	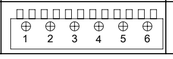	NONE	NONE	OPEN	OPEN	NONE

7 CIRCUIT

PART NUMBER	HOUSING USED	TERMINAL No.	TERMINAL VOID POSITION	REMOVED CODING KEYS	CONFIGURATION	LATCH BETWEEN	POLARIZING RIB BETWEEN	FIRST ENDWALL	LAST ENDWALL	COLOUR STRIPE
220330-5001	220329-0007	93268-0004	NONE	NONE	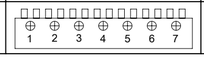	NONE	NONE	OPEN	OPEN	NONE

THIS DRAWING CONTAINS INFORMATION THAT IS PROPRIETARY TO MOLEX ELECTRONIC TECHNOLOGIES, LLC AND SHOULD NOT BE USED WITHOUT WRITTEN PERMISSION

DIMENSION UNITS	SCALE
mm	1:1

GENERAL TOLERANCES (UNLESS SPECIFIED)

ANGULAR TOL	±	0.5 °
4 PLACES	±	
3 PLACES	±	0.05
2 PLACES	±	0.1
1 PLACE	±	0.2
0 PLACES	±	

DRAFT WHERE APPLICABLE MUST REMAIN WITHIN DIMENSIONS

CURRENT REV DESC:

EC NO: 821743
DRWN: GOPIS 2024/08/20
CHK'D: PRAMOD 2025/05/14
APPR: GANESY 2025/06/02

INITIAL REVISION:
DRWN: MBN02 2022/05/09
APPR: MRAMAKRISHNA 2023/02/08

molex

R POWER 10 A, 0.75MM2
5MM TERMINAL PITCH (MATL: NYLON PA6)

PRODUCT CUSTOMER DRAWING

DOCUMENT NUMBER	DOC TYPE	DOC PART	REVISION
2203300001	PSD	000	A5

THIRD ANGLE PROJECTION	DRAWING	SERIES	MATERIAL NUMBER	CUSTOMER	SHEET NUMBER
	A2-SIZE	220330	SEE TABLE	GENERAL MARKET	8 OF 9

DOCUMENT STATUS	P1	RELEASE DATE	2025/06/02 10:41:40

FORMAT: master-tb-prod-A2
REVISION: J1
DATE: 2021/05/01

8 CIRCUIT

PART NUMBER	HOUSING USED	TERMINAL No.	TERMINAL VOID POSITION	REMOVED CODING KEYS	CONFIGURATION	LATCH BETWEEN	POLARIZING RIB BETWEEN	FIRST ENDWALL	LAST ENDWALL	COLOUR STRIPE
220330-6001	220329-0008	93268-0004	NONE	NONE	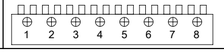	NONE	NONE	OPEN	OPEN	NONE

THIS DRAWING CONTAINS INFORMATION THAT IS PROPRIETARY TO MOLEX ELECTRONIC TECHNOLOGIES, LLC AND SHOULD NOT BE USED WITHOUT WRITTEN PERMISSION

DIMENSION UNITS	SCALE
mm	1:1

GENERAL TOLERANCES (UNLESS SPECIFIED)		
ANGULAR TOL	±	0.5 °
4 PLACES	±	
3 PLACES	±	0.05
2 PLACES	±	0.1
1 PLACE	±	0.2
0 PLACES	±	

DRAFT WHERE APPLICABLE MUST REMAIN WITHIN DIMENSIONS

CURRENT REV DESC:

EC NO: 821743
DRWN: GOPIS 2024/08/20
CHK'D: PRAMOD 2025/05/14
APPR: GANESY 2025/06/02

INITIAL REVISION:
DRWN: MBN02 2022/05/09
APPR: MRAMAKRISHNA 2023/02/08

THIRD ANGLE PROJECTION | DRAWING: A2-SIZE | SERIES: 220330

molex

R POWER 10 A, 0.75MM2
5MM TERMINAL PITCH (MATL: NYLON PA6)

PRODUCT CUSTOMER DRAWING

DOCUMENT NUMBER	DOC TYPE	DOC PART	REVISION
2203300001	PSD	000	A5

MATERIAL NUMBER	CUSTOMER	SHEET NUMBER
SEE TABLE	GENERAL MARKET	9 OF 9

DOCUMENT STATUS	P1	RELEASE DATE	2025/06/02 10:41:40

FORMAT: master-tb-prod-A2
REVISION: J1
DATE: 2021/05/01