

Ultrasonic sensor

UC2000-L2-E6-V15

- Sensor head bidirectional and rotatable
- Function indicators visible from all directions
- Quick mounting bracket
- Selectable sound lobe width
- Programmable

Single head system

Dimensions

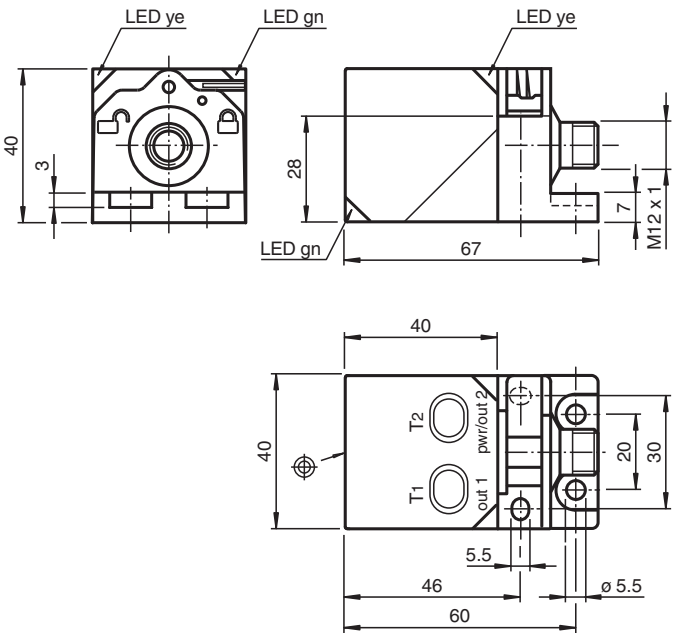

Technical Data

General specifications		
Sensing range		60 ... 2000 mm
Adjustment range		80 ... 2000 mm
Dead band		0 ... 60 mm
Standard target plate		100 mm x 100 mm
Transducer frequency		approx. 175 kHz
Nominal ratings		
Response delay		minimum: 60 ms factory setting: 120 ms
Time delay before availability	t_v	≤ 1600 ms
Indicators/operating means		
LED green		Operating display
LED yellow 1		switching state switch output 1

Release date: 2025-06-24 Date of issue: 2025-06-24 Filename: 277765_eng.pdf

Technical Data

LED yellow 2		switching state switch output 2
LED red		error
Electrical specifications		
Operating voltage	U_B	10 ... 30 V DC , ripple 10 %$_{SS}$
No-load supply current	I_0	≤ 50 mA
Interface		
Interface type		Serial interface (programming adapter required) 9600 BPS, no parity, 8 data bits, 1 stop bit
Input/Output		
Input/output type		1 synchronization connection, bidirectional
0 Level		0 ... 1 V
1 Level		4 V ... U_B
Input impedance		> 12 kΩ
Output current		< 12 mA
Pulse length		0.5 ... 300 ms (level 1)
Pulse interval		≥ 33 ms (level 0)
Synchronization frequency		
Common mode operation		≤ 30 Hz
Multiplex operation		≤ 33 Hz / n , n = number of sensors , n ≤ 10 (factory setting: n = 5)
Output		
Output type		2 switch outputs PNP, NO/NC, programmable
Rated operating current	I_e	200 mA , short-circuit/overload protected
Voltage drop	U_d	≤ 2 V
Repeat accuracy		≤ 0.1 % of full-scale value
Switching frequency	f	≤ 5 Hz
Range hysteresis	H	programmable , preset to 1 mm
Temperature influence		< 1.5 % of full-scale value
Compliance with standards and directives		
Standard conformity		
Standards		EN IEC 60947-5-2:2020 IEC 60947-5-2:2019
Approvals and certificates		
UL approval		cULus Listed, Class 2 Power Source
CCC approval		CCC approval / marking not required for products rated ≤36 V
Ambient conditions		
Ambient temperature		-25 ... 70 °C (-13 ... 158 °F)
Storage temperature		-40 ... 85 °C (-40 ... 185 °F)
Mechanical specifications		
Connection type		Connector plug M12 x 1 , 5-pin
Degree of protection		IP67
Material		
Housing		PA-GF35
Transducer		epoxy resin/hollow glass sphere mixture; polyurethane foam
Mass		115 g
Dimensions		
Height		40 mm
Width		40 mm
Length		40 mm
Factory settings		
Output 1		near switch point: 80 mm far switch point: 2000 mm output function: Window mode output behavior: NO contact

Release date: 2025-06-24 Date of issue: 2025-06-24 Filename: 277765_eng.pdf

Technical Data

Output 2		near switch point: 150 mm far switch point: 1000 mm output function: Window mode output behavior: NO contact
Beam width		wide
Evaluation procedure		averaging (MxN) M = 5 N = 2
General information		
Supplementary information		Switch settings of the external programming adapter: "output load": pull-down "output logic": inv

Connection Assignment

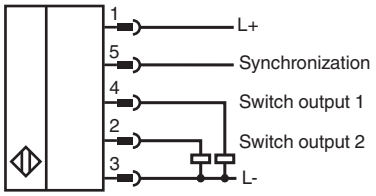

Connection Assignment

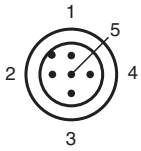

Wire colors in accordance with EN 60947-5-2

1	BN	(brown)
2	WH	(white)
3	BU	(blue)
4	BK	(black)
5	GY	(gray)

Characteristic Curve

Characteristic response curve

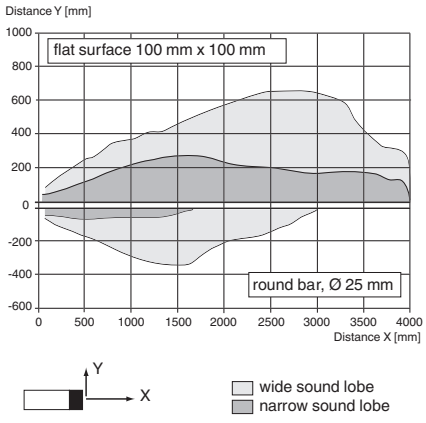

Release date: 2025-06-24 Date of issue: 2025-06-24 Filename: 277765_eng.pdf

Programming

Programming procedure

The sensor features two outputs with two programmable switch points, each (for a total of 4). Programming the switch points and the operating mode can be done in two different ways:

- via the sensor's programming buttons
- via the serial interface, which requires an external interface adapter

The procedure for programming via the sensor's programming buttons is described below. For programming using the serial interface, please refer to the software manual. Switch points and operating modes of each output can be programmed independently without influencing each other.

Note:

- Programming is enabled for 5 minutes after power-on. After 5 minutes without programming activity the programming feature will be locked.
- During any programming step it is possible to leave the programming routine without changing the sensor settings by pressing the currently used programming button for 10 s.

Programming the Switch Points

Notes:

- The description below leads you through programming output 1's switch points. The procedure for output 2 is exactly the same with the only difference, being to use the Programming Button T2.
- If the red LED flashes during the programming procedure, it indicates uncertain target detection. In this case, please correct the target alignment until the yellow LED flashes. The new settings will only be stored in the sensor's memory if the yellow LED flashes.

Programming the Near Switch Point

1. Place the target at the desired near switch point position
2. Press Programming Button T1 for 2 s (corresponding yellow LED flashes)
3. Press Programming Button T1 briefly (green LED flashes three times for confirmation). The sensor returns to normal operation.

Programming of the Far Switch Point

1. Place the target at the desired far switch point position
2. Press Programming Button T1 for 2 s (corresponding yellow LED flashes)
3. Press Programming Button T1 for 2 s (green LED flashes three times for confirmation). The sensor returns to normal operation.

Programming Modes of Operation

Note:

The description below leads you through programming of the modes of operation for output 1. The procedure for output 2 is exactly the same with the only difference,being to use Programming Button T2.

The sensor provides a three step routine to program the modes of operation. In this routine you can program:

1. Output function
2. Output behavior
3. Beam width

Programming the modes is carried out sequentially. To toggle from one mode to the next, press the Programming button for 2 s.

Press Programming Button T1 for 5 s to enter the operating modes programming routine.

Programming the output function

1. The green LED flashes. The number of flashes indicates the current output function:
   single flash: Switch point output function
   double flash: Window output function
   triple flash: Hysteresis output function.
2. Press Programming Button T1 briefly to toggle sequentially through these output functions and select the desired mode.
3. Press Programming Button T1 for 2 s to save and enter the programming routine for output behavior

Programming the output behavior

1. The yellow LED flashes. The number of flashes indicates the current output behavior:
   single flash: Normally Open (NO)
   double flash: Normally Closed (NC).
2. Press Programming Button T1 briefly to toggle sequentially through these output behaviors and select the desired mode.
3. Press Programming Button T1 for 2 s to save and enter the programming routine for beam width.

Programming the beam width

1. The red LED flashes. The number of flashes indicates the current beam width setting:
   single flash: narrow
   double flash: medium
   triple flash: wide.
2. Press Programming Button T1 briefly to toggle sequentially through these beam shapes.
3. Press Programming Button T1 for 2 s to save and exit the operating modes programming routine.

Note:

Independently programming the beam width for each individual output is not possible. The last programmed beam width is valid for both outputs. It doesn't matter which Programming Button is used.

Release date: 2025-06-24 Date of issue: 2025-06-24 Filename: 277765_eng.pdf

Factory Setting

Reset Sensor to Factory Settings

The sensor has a feature to reset to factory settings

1. Disconnect the sensor from power supply
2. Press and hold one of the Programming Buttons T1 or T2
3. Connect Sensor to power supply (red and yellow LED flash simultaneously for 5 s then green and yellow LED flash simultaneously)
4. Release Programming Button

The sensor now operates with default factory settings.

Factory settings

See technical data.

Indication

The sensor is provided with LEDs to indicate various conditions.

	Green LED	Yellow LED out1 / out2	Red LED
During Normal operation			
Proper operation	On*)	Switching state output 1 / output 2	Off
Interference (e.g. compressed air)	Off	remains in previous state	On
During Switch Point Programming			
Object detected	Off	Flashing	Off
No object detected	Off	Off	Flashing
Confirmation after Programming	Triple flashing	Off	Off
Programming failed warning	Off	Off	Triple flashing
During Sensor Mode Programming			
Programming the output function	Flashing	Off	Off
Programming the output behaviour	Off	Flashing	Off
Programming the beam width	Off	Off	Flashing

*) off if yellow LED **out2** is on

Commissioning

Synchronization

This sensor features a synchronization input for suppressing ultrasonic mutual interference ("cross talk"). If this input is not connected, the sensor will operate freewheeling using internally generated clock pulses. It can be synchronized by applying an external square wave or by means of appropriate programming via the serial interface. Each falling edge of the synchronization pulse triggers transmission of a single ultrasonic pulse. If the synchronization signal remains low for ≥ 1 second, the sensor will revert to normal operating mode. Normal operating mode can also be activated by opening the signal connection to the synchronization input.(See note below)
If the synchronization input goes to a high level for > 1 second, the sensor will switch to standby mode, indicated by the green LED. In this mode, the output(s) will remain in the last valid output state. When using the external synchronization feature, please refer to the software description.

Note:

If the option for synchronization is not used, the synchronization input has to be connected to ground (0V) or the sensor has to be operated via a V1 cordset (4-pin).
The synchronization function cannot be activated during programming mode and vice versa.

The following synchronization modes are possible:

1. Several sensors (max. number see technical data) can be synchronized together by interconnecting their respective synchronization inputs. In this case, each sensor alternately transmits ultrasonic pulses in a self multiplexing mode. No two sensors will transmit pulses at the same time. (See note below)
2. Several sensors (max. number see technical data) can be synchronized together by interconnecting their respective synchronization inputs. Due to programming via the sensors interface one sensor acts as a master device, all the others as slave devices. (see description of the interface) In this master / slave mode the sensors are triggered in parallel and are synchronized by a common synchronization pulse, provided by the master device.
3. Multiple sensors can be controlled by the same external synchronization signal. In this mode the sensors are triggered in parallel and are synchronized by a common external synchronization pulse. All sensors must be parameterized for external synchronization by means of the sensor interface. See software description.
4. A separate synchronization pulse can be sent to each individual sensor. In this mode the sensors operate in external multiplex mode. (See note below). All sensors must be parameterized for external synchronization by means of the sensor interface. See software description.
5. A high level ($+U_B$) or a low level ($-U_B$)on the synchronization input switches the sensor to standby mode if it is parameterized for external synchronization.

Note:

Sensor response times will increase proportionally to the number of sensors that are in the synchronization string. This is a result of the multiplexing of the ultrasonic transmit and receive signal and the resulting increase in the measurement cycle time.

Note:

The sensors syncronization input delivers an output current in case of low level and burdens with its input impedance in case of high level. Please pay attention that the synchronizing device needs to have that driver capability:
driver current against $+U_B \geq n$ * high-level/input impedance (n = number of sensors to be synchronized)

Release date: 2025-06-24 Date of issue: 2025-06-24 Filename: 277765_eng.pdf

driver current against 0V ≥ n * output current (n = number of sensors to be synchronized).

Release date: 2025-06-24 Date of issue: 2025-06-24 Filename: 277765_eng.pdf