RFMi
BRAND OF AKOUSTIS

RoHS compliant

CDR1006

1325 MHz Ceramic Filter

Package Dimensions

5.4 x 4.35 x 2.85 mm

ELECTRICAL CHARACTERISTICS:

This filter satisfies Table 1 at Temperature Range : -30 to +85℃

CENTER FREQUENCY :fo= 1325 MHz

PASSBAND WIDTH : 950~1700 MHz

INPUT/OUTPUT IMPEDANCE :50Ω

Max. INPUT POWER : 1 W

Moisture Sensitivity Level: 2A

TABLE 1

NO.	ITEM		SPECIFICATION		
			Min	Typ	Max
1	PASS BAND INSERTION LOSS (950~1690 MHz)			1.0 dB	1.5 dB
	PASS BAND INSERTION LOSS (1690~1700 MHz)			2.5 dB	3.0 dB
2	PASS BAND RIPPLE (950~1690 MHz)			1.0 dB	1.2 dB
	PASS BAND RIPPLE (1690~1700 MHz)			1.5 dB	1.8 dB
3	PASS BAND RETURN LOSS (950~1690 MHz)		9 dB	11dB	
	PASS BAND RETURN LOSS (1690~1700 MHz)		5 dB	8 dB	
4	STOP—BAND ATTENUATION	1740 MHz	16 dB	17dB	
Item NO.4 specifies the absolute value of attenuation.					

© 2020 by RFM Integrated Device, Inc.

TYPICAL ELECTRICAL CHARACTERISTICS

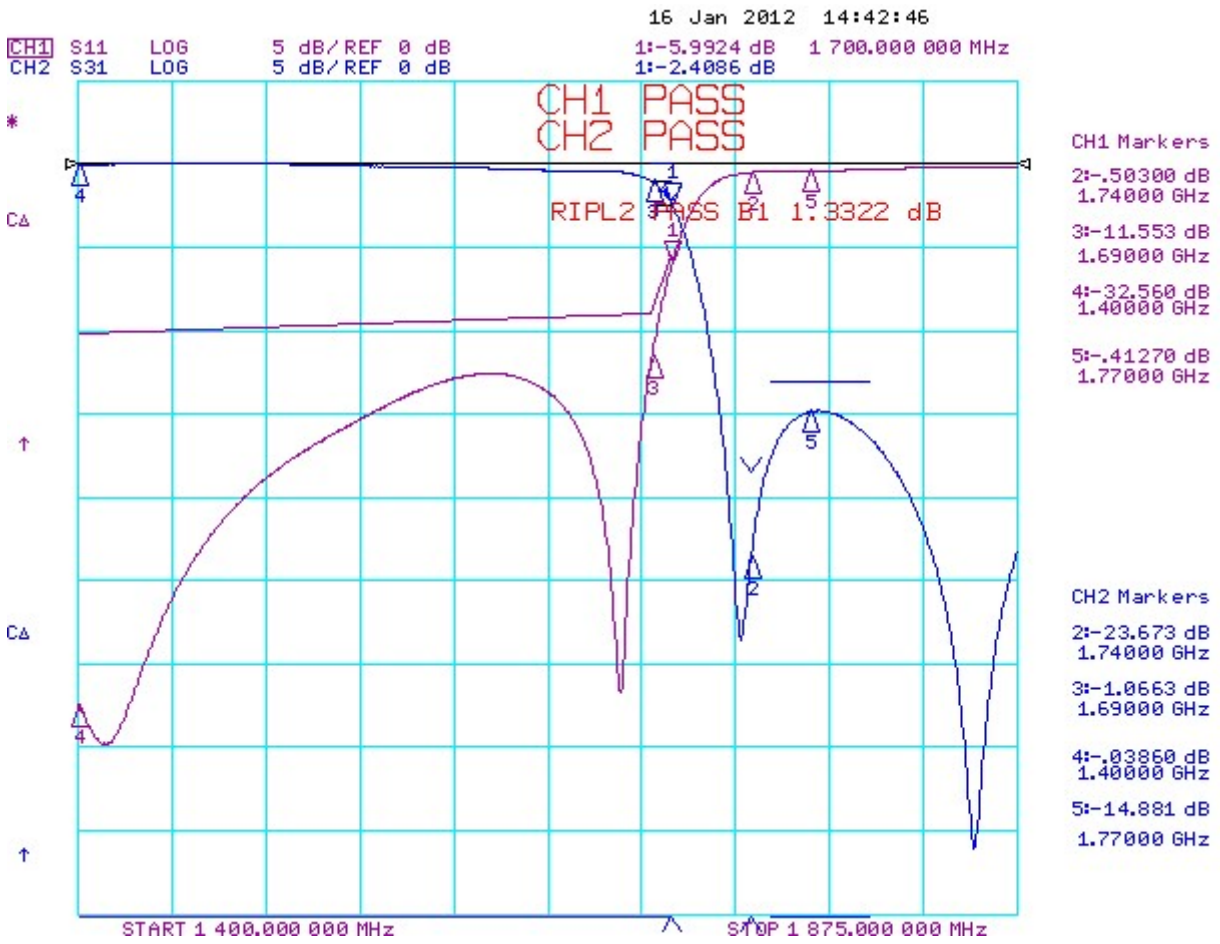

© 2020 by RFM Integrated Device, Inc.

2.MANUFACTURING CONSIDERATIONS:

2-1 COMPONENT HANDLING:

All necessary special handling techniques shall be adopted in order to avoid contamination of metallization/terminations. Examples include use of finger cots, plastic tweezers, etc.

2-2 PART PLACEMENT:

A placement force of up to 200 grams is applied (using a 2.0 mm or a 0.080 inch diameter rod) to the center of the part while it remaining in its carrier tape.

2-3 REFLOW SOLDERING CONDITION:

The recommended reflow soldering condition is shown in following figure. The temperature should be the temperature at the device.

	Profile for eutectic SnPb solder paste	Profile for leadfree solder paste	
Soldering type (measuring point on top surface of the component)	reflow 230 (max. 10 sec.)	reflow 260 (max. 3 sec.)	℃
Composition of solder paste	62Sn/36Pb/2Ag	96.5Sn/3Ag/0.5Cul	

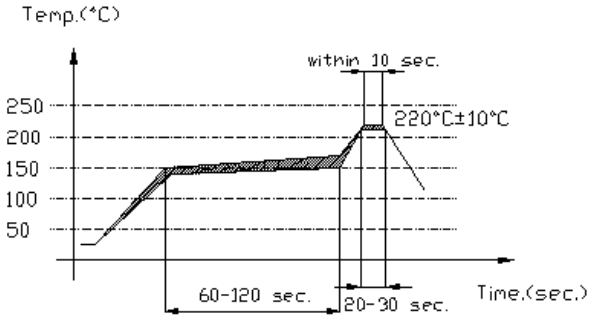

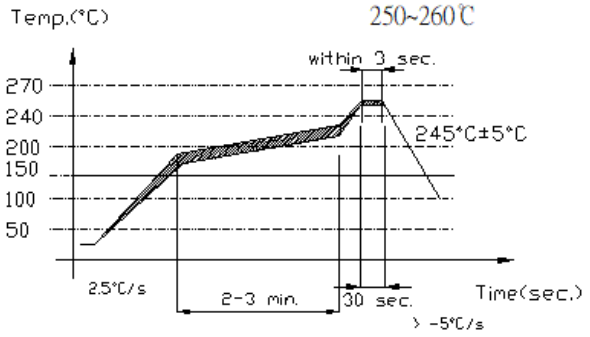

2-4 SOLDERING WITH IRON:

Soldering condition : Soldering iron temperature 270±10 ℃.

Apply preheating at 120℃ for 2-3 minutes. Finish soldering for each terminal within 3 seconds.

2-5 STORAGE CONDITIONS:

2-5-1 Use the product of former delivery first.

2-5-2 Temperature: 0℃ to 40 ℃

Humidity: 80%RH or less

2-5-3 The product should not be stored exceeding six months as packed by the manufacturer or one month (once unpacked). Use the product within that period.

© 2020 by RFM Integrated Device, Inc.

3.DIMENSION AND PCB LAYOUT

3-1 SHAPE AND DIMENSION

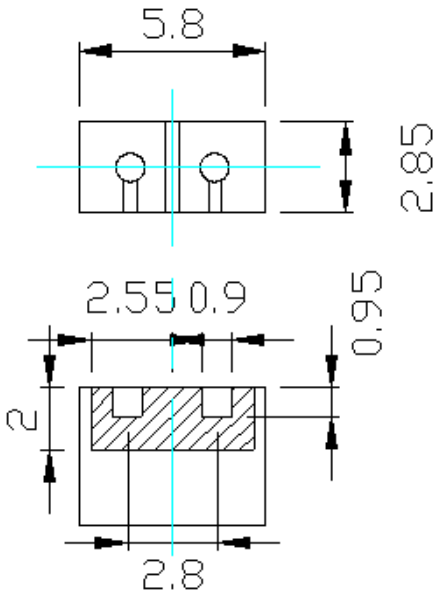

Dimensions in mm
Tolerance:±0.3

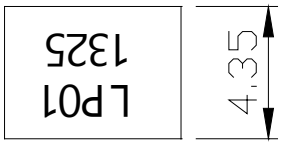

1325 :product name (J1325)
LP: Low pass filter
01:month

3-2 PCB RECOMMENDED PATTERN FOR FILTER

Note: Test PCB material: Rogers 3.38, 0.5mm.

The filter use limit: the layout goes away PCB edge.

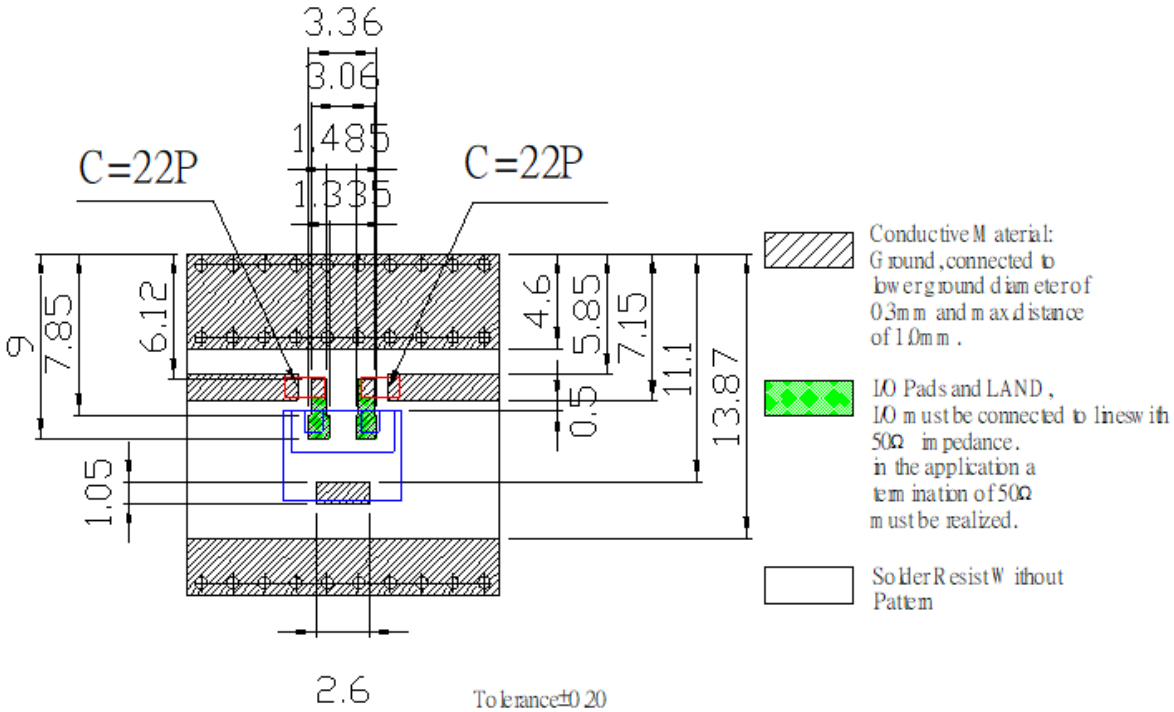

3-3 Delivery mode

3-3-1 Carrier tape

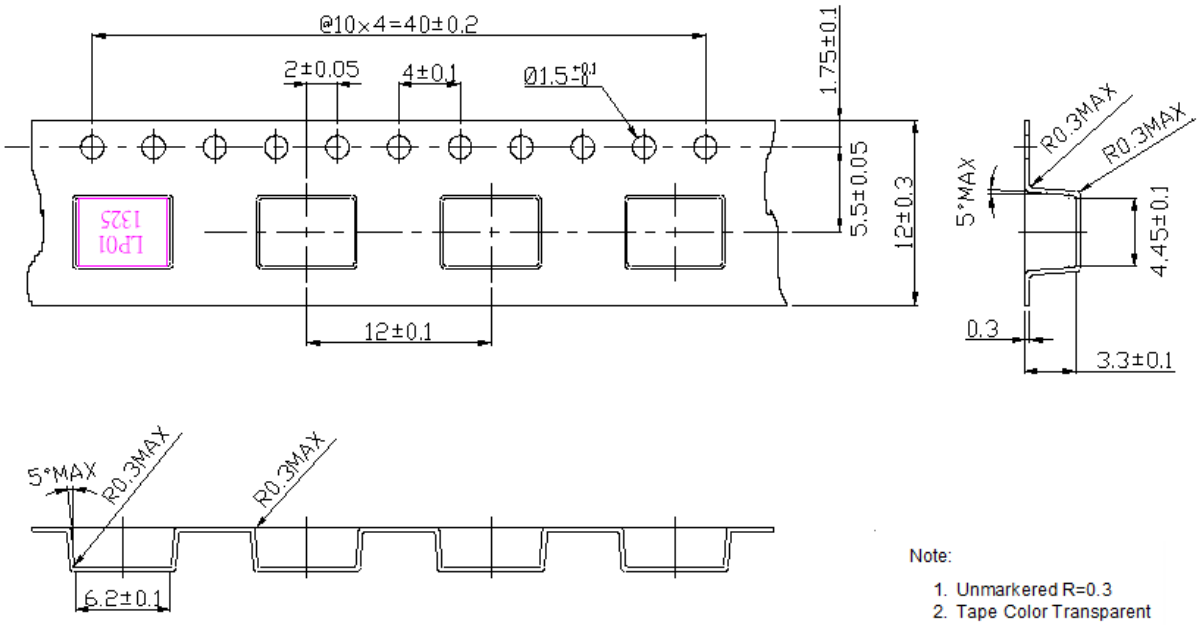

3-3-2 Reel

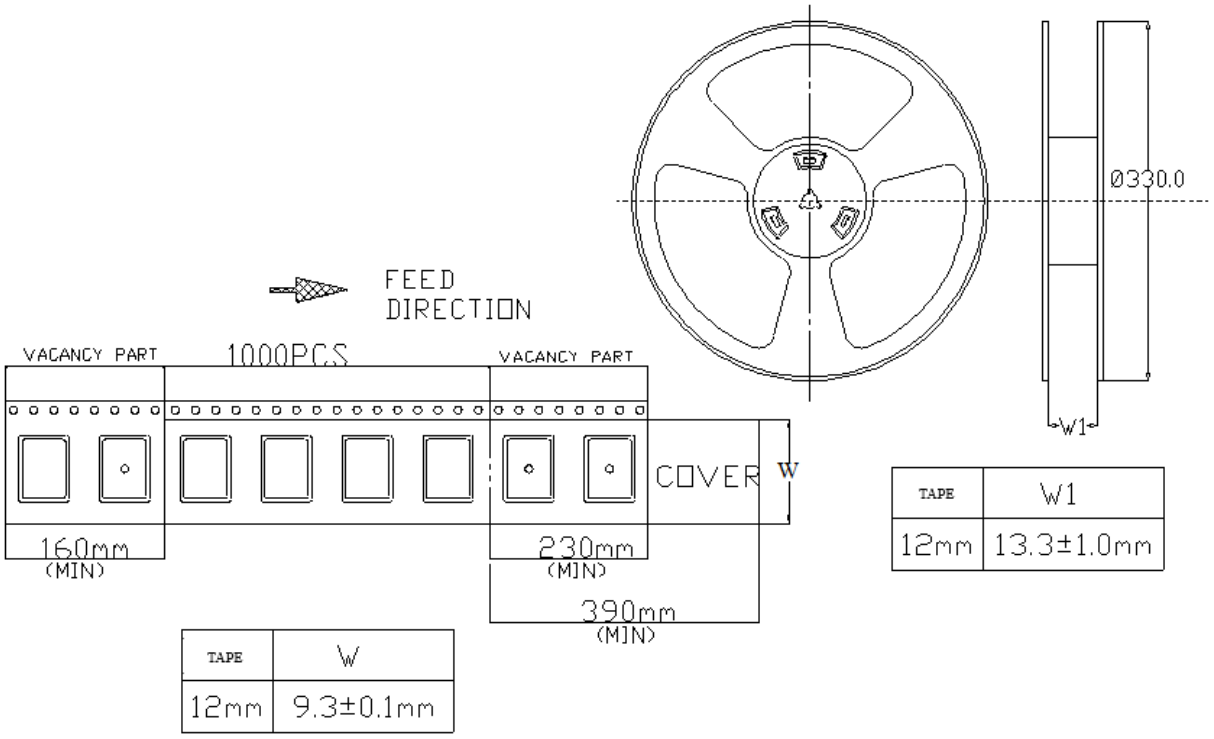

TAPE	W
12mm	9.3±0.1mm

TAPE	W1
12mm	13.3±1.0mm

3-3-3 Package style

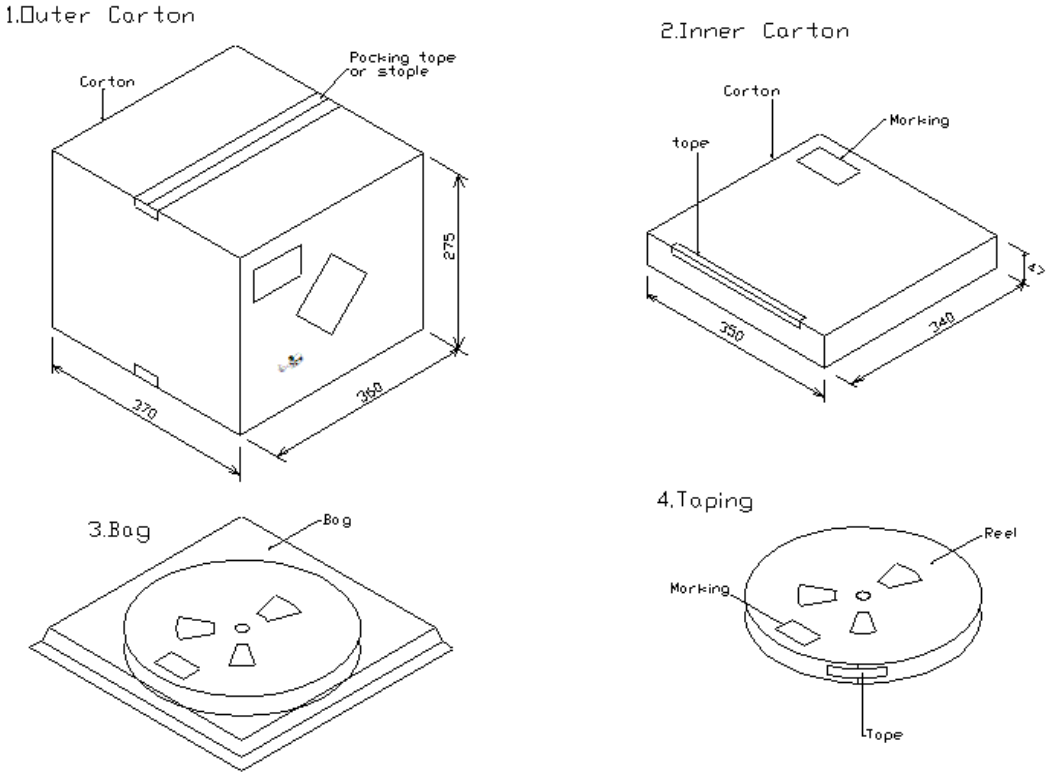

Unit:mm

4.ENVIRONMENTAL RELIABILITY

4-1. STANDARD CONDITION

This standard shall satisfy the condition of Table 1 after the following test 4-2.

4-2. TEST METHOD

The filter shall withstand the following test condition.

4-2-1. Low Temperature Hold Test :-40℃

Unit shall be subjected to the above condition for 10 hours and then be left for more than 2 hours at room temperature.

4-2-2. High Temperature Hold Test:+85℃

Unit shall be subjected to the above condition for 10 hours and then be left for more than 2 hours at room temperature.

4-2-3. Humidity Resistance Test:

Unit shall be subjected to the 60±2℃, 95% relative humidity for 24 hours and then be left for more than 2 hours at 25±5℃ in less than 65% relative humidity.

4-2-4. Vibration Resistance Test:

The vibration frequency shall be varied within 10-60 Hz with the amplitude of 1.5mm for 20 minutes. Devices are applied to vibration in each of three mutually perpendicular planes for 2 hours.

4-2-5. Mechanical Shock Resistance Test:

A half sine wave shock with a maximum acceleration of 30 G's and duration of 11 msec. Unit is applied in six directions at right angles to each other by three shocks in each direction.

4-2-6. Thermal Shock Resistance Test:

After the unit is applied to thermal shock -40℃ ⇔ +85℃ for 2 hours soak at each temperature with transition time less than 10 seconds for 5 cycles and then be left for more than 1 hour at 25±5℃ in less than 65% relative humidity.

4-2-7. Lead Pins Heat Resistance Test: (L type and M type series)

After the lead pins of the unit are soaked in solder bath at 270 ± 10℃ for 5 seconds and then be left for more than 1 hour at 25±5℃ in less than 65% relative humidity.

4-2-8. Adhesion Test:

The device is subjected to be soldered on test PCB. Then apply 0.5Kg(5N) of force for 10±1 seconds in the direction of arrow. (the soldering should be done by reflow and be conducted with care so that the soldering is uniform and free of defect by stress such as heat shock) .

© 2020 by RFM Integrated Device, Inc.

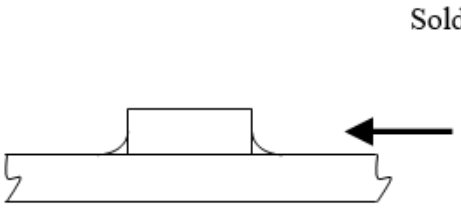

5. OTHER

5-1. IN CASE OF ANY PROBLEM REGARDING THIS SPECIFICATION, BOTH CUSTOMER AND MANUFACTURER SHALL DISCUSS AND SOLVE IT.

5-2. INSTALLING A DIELECTRIC FILTER /DUPLEXER:

5-2-1 How to install dielectric filter/duplexer:

The recommend reflow process for the installation of dielectric filter/ duplexer onto PCB. Soldering the dielectric filter/duplexer onto a PCB with a hand soldering iron is not recommended.

5-2-2 Connecting I/Os:

The edge of metal shield, if any, shall be soldered to the electrode of PCB board by reflow process. Tx, Ant, and Rx portion of the PCB shall have either via hole or through hole.

I/Os of the filter/duplexer shall be connected to 50- ohm strip lines that pass through these holes to the backside of the PCB. The 50- ohm strip lines from the duplexer shall be connected to the next circuit element.

It is important to place the filter/duplexer on one side and the connecting strip lines on the other side in order to avoid the interferences by the signal radiation from the strip lines. Such interferences may change the duplexer performance.

5-2-3 Solder and resist area:

Solder and resist area shall be prepared according to referenced Land pattern for each part number provided by the manufacturer. The Referenced Land Pattern may be found in the manufacturer's Product Catalog. The solder area under the filter/duplexer should be divided into smaller patches with narrow strips of resist area. This is to help the evacuation of the gases generated from the solder paste during reflow process.

© 2020 by RFM Integrated Device, Inc.

5-3 FILTER REPLACEMENT:

5-3-1 Removal of filters:

If filter replacement is necessary, it is recommended that a directed source hot air repair station be used. Use tweezers to handle the filter. Do not expose the filter to temperatures in excess of 220 ºC as damage may occur making postmortem difficult.

5-3-2 Installing Replacement Filter:

It is helpful that the filter be preheated to 180 ºC before reflow. Pre-tinning the filter with a soldering iron is not recommended due to possible damage generated by a concentrated heat source. Use tweezers to handle the filter. Do not place material handling devices inside of the resonator holes as filter damage may occur. The use of the same silver bearing solder paste is recommended for filter rework or replacement. As with the initial reflow, replacement filters should not be exposed to temperatures in excess of 215 ºC.

Disclaimer: The center of this section is presented only as the recommendation or the reference for the use and installation of the dielectric ceramic filter /duplexer. Since the manufacturer does not know any particular conditions, circumstances, and environment of each customer, The manufacturer does not take any responsibility for the consequences caused by use out of this specification document. The readers of this document should examine all possible technical issues regardless of being discussed in this document.

© 2020 by RFM Integrated Device, Inc.

6. FAQ

6-1 Filter/Duplexer functions:

6-1-1 Max input power?

- Max input power is largely determined by insertion loss and the volume (mass) of the filter/ duplexer.
- Consult the manufactuer for the specific value for each part number.

6-1-2 What is the function of shielding metal attached to the filter/duplexer?

- To avoid the deterioration of filter properties (attenuations) by the radiation of electromagnetic wave.
- To prevent other components from affecting filter properties.
- To prevent the filter from affecting other components nearby by the radiation of electromagnetic wave.

6-2 Measuring filter and duplexer with test fixture.

6-2-1 When the filter/duplexer is measured with a test fixture, the value is different from the values on in the manufacturer's inspection report. Why does this happen?

- Check if the “Thru” correctly adjusted.(When the manufacturer supplies a test fixture, the manufacturer usually informs the adjustment value for insertion loss. Since the measured insertion loss includes the loss of the PCB, it is necessary to deduct from the measured value the adjustment value that is the loss from the PCB.
- Check if the filter/duplexer securely grounded. Please check if the shielding metal is correctly grounded.

6-2-2 The filter installed in the system does not perform as good as the agreed specifications. Why does this happen?

- Check whether input and output of the PCB is adjusted to Ohms (check if the strip lines are adjusted to 50 ohms. Eliminate any parallel capacitance between Input and output pads. The parallel capacitance is often observed with in PCBs).
- Make sure there are no couplings between Input and Output traces. Make sure there is enough distance between them.
- Make sure there is no metallic components near the filter/duplexer.
- Make sure the filter/duplexer is not deformed nor damaged.
- Make sure the shielding metal is properly grounded to the earth.

© 2020 by RFM Integrated Device, Inc.

6-3 Layout and installation of filters and duplexers:

6-3-1 How apart should the filter be placed from the nearby components? How close could the filter be placed near other chip components or metal casing covering RF circuits?

- If the filter/duplexer has the shielding metal, the shielding metal should not contact other components. Although the filter/duplexer performance is not affected by the metal shield contacting other components, it is recommended that the filter/ duplexer should have a certain distance to other neighboring components. This is to avoid any physical force exerted by other objects nearby which may damage or destroy the filter/duplexer.
- If there is no shielding metal on the filter/duplexer, the opening surface side shall be 2 to 3 mm apart from the nearby components or objects. (The space shall be equivalent to the height of the ceramic body.)
- Other surfaces shall have 1 mm spacing to the nearby components.

6-3-2 Land pattern layout and connection of the input and output lines.

- Prepare the PCB according to the manufacturer's recommended land pattern.
- Make sure to ground the shielding metal.
- Keep Input and Output traces as far apart each other as possible.

6-3-3 What kind of PCB is recommended for the installation of the filter/duplexer? Is there any recommended thickness of the PCB?

- There are no restrictions for the thickness of PCBs as far as the lines adjusted to 50 Ohms can be drawn on the PCB. It is however not recommended to use the PC board that is too thin, as the parallel capacitance often occurs in I/O pad area on very thin PCB.
- The filter /duplexer , in particular those of large size, shall not be installed very near the PCB’s fixture or fixture areas (such as bolts to the bases or the chassis), as the deformation of the PCB due to dropping or heat cycles may damage the filter/duplexer.

6-3-4 How shall the filter/duplexer be soldered to PCBs?

- Refer to the manufacturer's recommended land pattern.
- Use reflow oven and follow the manufacturer's recommended reflow temperature profile.
- It is not recommended to use soldering iron or manual soldering.

CAUTION: Electrostatic Sensitive Device. Observe precautions for handling.

NOTES:

1. The design, manufacturing process, and specifications of this device are subject to change.
2. US or International patents may apply.
3. RoHS compliant from the first date of manufacture.

© 2020 by RFM Integrated Device, Inc.