Data sheet



# DUV60E-D4KCWADA

## DUV60

MEASURING WHEEL ENCODERS

SICK
Sensor Intelligence.



Illustration may differ

## Ordering information

| Type | part no. |
|---|---|
| DUV60E-D4KCWADA | 1104977 |

Other models and accessories ➜ www.sick.com/DUV60

## Detailed technical data

### Safety-related parameters

| | |
|---|---|
| **$MTTF_D$ (mean time to dangerous failure)** | 275 years (EN ISO 13849-1) [1] |

[1] This product is a standard product and does not constitute a safety component as defined in the Machinery Directive. Calculation based on nominal load of components, average ambient temperature 40 °C, frequency of use 8760 h/a. All electronic failures are considered hazardous. For more information, see document no. 8015532.

### Performance

| | |
|---|---|
| **Pulses per revolution** | 1 ... 1500 [1] |
| **Resolution in pulses/mm** | 0.125 mm/pulse to 304.8 mm/pulse (type-dependent) |
| **Measuring step** | 90° electric/pulses per revolution |
| **Measuring step deviation** | ± 18°, / pulses per revolution |
| **Error limits** | Measuring step deviation x 3 |
| **Duty cycle** | 0.5 ± 5 % |
| **Initialization time** | < 5 ms [2] |

[1] Available pulses per revolution see type code.
[2] Valid positional data can be read once this time has elapsed.

### Interfaces

| | |
|---|---|
| **Communication interface** | Incremental |
| **Communication Interface detail** | TTL / HTL |
| **Parameterising data** | DIP switch, selectable output |

### Electrical data

| | |
|---|---|
| **Operating power consumption (no load)** | 120 mA |
| **Connection type** | Male connector, M12, 8-pin, universal [1] |
| **Pulses per revolution** | ✓ |
| **Output voltage** | ✓ |
| **Direction of rotation** | ✓ |
| **Power consumption max. without load** | ≤ 1.25 W |

[1] The universal connection is rotatable so that it is possible to position the conector in the radial or axial direction.

| | |
|---|---|
| **Supply voltage** | 4.75 V ... 30 V |
| **Load current max.** | ≤ 30 mA, per channel |
| **Maximum output frequency** | 60 kHz |
| **Reference signal, number** | 1 |
| **Reference signal, position** | 180°, electric, gated with A |
| **Reverse polarity protection** | ✓ |
| **Short-circuit protection of the outputs** | ✓ |

[1] The universal connection is rotatable so that it is possible to position the conector in the radial or axial direction.

## Mechanical data

| | |
|---|---|
| **Measuring wheel circumference** | 12 ″ |
| **Measuring wheel surface** | Smooth plastic (urethane) [1] |
| **Spring arm design** | Without mount |
| **Mass** | 0.9 kg [2] |
| **Encoder material** | |
| Shaft | Stainless steel |
| Flange | Aluminum |
| Housing | Aluminum |
| Cable | PVC |
| **Spring arm mechanism material** | |
| Spring element | Spring steel |
| Measuring wheel, spring arm | Aluminum |
| Yoke | Aluminum |
| Counterweight | Aluminum |
| **Start up torque** | 0.5 Ncm |
| **Operating torque** | 0.4 Ncm |
| **Operating speed** | 1,500 $min^{-1}$ |
| **Bearing lifetime** | 3.6 x $10^9$ revolutions |
| **Maximum travel/deflection of spring arm** | 40 mm [3] |
| **Recommended pretension** | 20 mm [3] |
| **Max. permissible working area for the spring (continuous operation)** | ± 10 mm |

[1] The surface of a measuring wheel is subject to wear. This depends on contact pressure, acceleration behavior in the application, traversing speed, measurement surface, mechanical alignment of the measuring wheel, temperature, and ambient conditions. We recommend you regularly check the condition of the measuring wheel and replace as required.
[2] Based on an encoder with a plug connector output and urethane rollers, no mounting necessary (arm mount).
[3] Only applies to variants with spring arm mounting.

## Ambient data

| | |
|---|---|
| **EMC** | According to EN 61000-6-2 and EN 61000-6-3 |
| **Enclosure rating** | IP65 [1] |
| **Permissible relative humidity** | 90 % (Condensation not permitted) |
| **Operating temperature range** | –30 °C ... +70 °C |

[1] When the mating connector is installed and the DIP switch door is sealed with the encoder housing.

| | |
|---|---|
| **Storage temperature range** | –40 °C ... +75 °C |

[1] When the mating connector is installed and the DIP switch door is sealed with the encoder housing.

## Certificates

| | |
|---|---|
| **EU declaration of conformity** | ✓ |
| **UK declaration of conformity** | ✓ |
| **ACMA declaration of conformity** | ✓ |
| **China-RoHS** | ✓ |
| **cULus certificate** | ✓ |

## Classifications

| | |
|---|---|
| **ECLASS 5.0** | 27270501 |
| **ECLASS 5.1.4** | 27270501 |
| **ECLASS 6.0** | 27270590 |
| **ECLASS 6.2** | 27270590 |
| **ECLASS 7.0** | 27270501 |
| **ECLASS 8.0** | 27270501 |
| **ECLASS 8.1** | 27270501 |
| **ECLASS 9.0** | 27270501 |
| **ECLASS 10.0** | 27270790 |
| **ECLASS 11.0** | 27270707 |
| **ECLASS 12.0** | 27270504 |
| **ETIM 5.0** | EC001486 |
| **ETIM 6.0** | EC001486 |
| **ETIM 7.0** | EC001486 |
| **ETIM 8.0** | EC001486 |
| **UNSPSC 16.0901** | 41112113 |

## Dimensional drawing

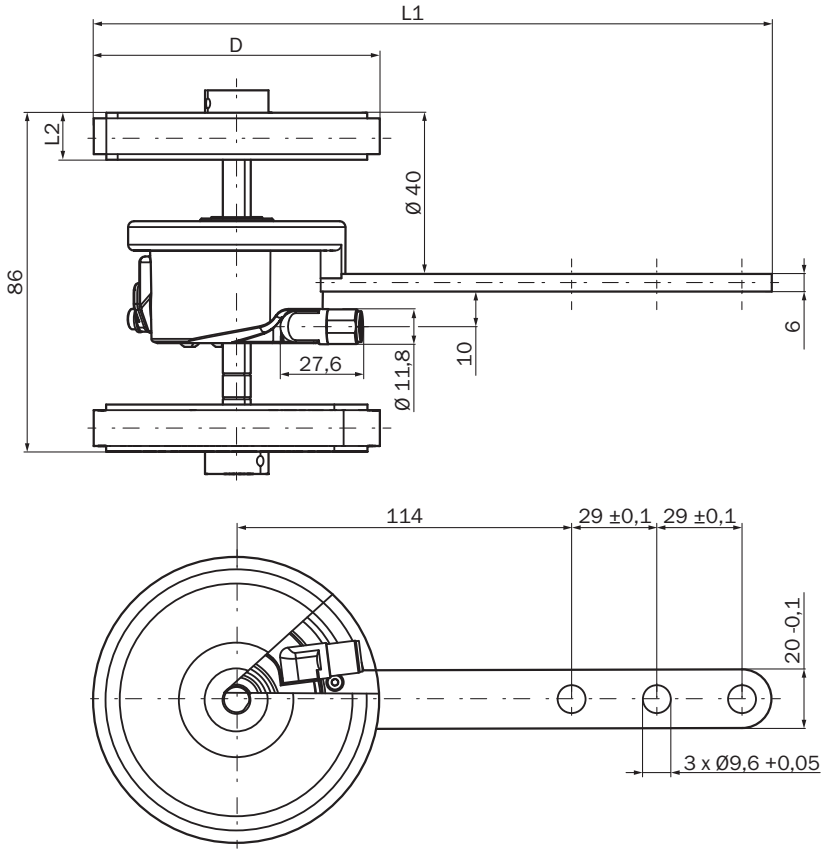


Dimensions in mm (inch)

## PIN assignment

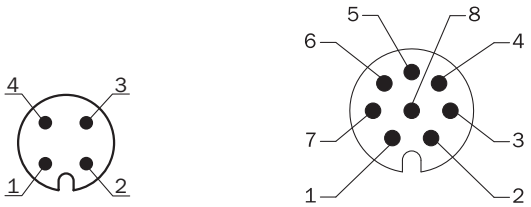


| Wire colors (cable connection) | Male connector M12, 4-pin | Male connector M12, 8-pin | Output function | | | | Explanation |
|---|---|---|---|---|---|---|---|
| | | | A | B | C | D | |
| Brown | - | 1 | A- | CW- | A- | A- | Signal |
| White | 4 | 2 | A | CW | A | A | Signal |
| Black | - | 3 | B- | CCW- | Direction- | B- | Signal |
| Pink | 2 | 4 | B | CCW | Direction | Fault (M12, 4-pin)B (M12, 8-pin and cable connection) | Signal |
| Yellow | - | 5 | Z- | Fault- | Fault- | Fault- | Signal |
| Violet | - | 6 | Z | Fault | Fault | Fault | Signal |

| Wire colors (cable connection) | Male connector M12, 4-pin | Male connector M12, 8-pin | Output function | | | | Explanation |
|---|---|---|---|---|---|---|---|
| | | | A | B | C | D | |
| Blue | 3 | 7 | GND | GND | GND | GND | Ground connection |
| Red | 1 | 8 | $U_S$ | $U_S$ | $U_S$ | $U_S$ | Supply voltage |
| - | - | - | Case | Case | Case | Case | Earth fault protection |
| Shielding | - | - | Shielding | Shielding | Shielding | Shielding | Shielding |

## Adjustments Status indicator LED

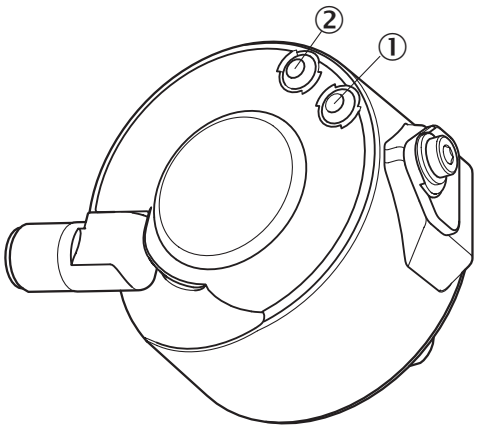


① Signal
② Fault/Power

## Recommended accessories

Other models and accessories ➜ www.sick.com/DUV60

| | Brief description | Type | part no. |
|---|---|---|---|
| connectors and cables | | | |
|  | • **Connection type head A:** Flying leads<br>• **Connection type head B:** Flying leads<br>• **Signal type:** SSI, Incremental, HIPERFACE®<br>• **Items supplied:** By the meter<br>• **Cable:** 8-wire, PUR, halogen-free<br>• **Description:** SSI, shieldedIncrementalHIPERFACE® | LTG-2308-MWENC | 6027529 |
|  | • **Connection type head A:** Female connector, M12, 8-pin, straight, A-coded<br>• **Signal type:** Incremental, SSI<br>• **Cable:** CAT5, CAT5e<br>• **Description:** Incremental, shieldedSSI<br>• **Connection systems:** IDC quick connection<br>• **Permitted cross-section:** 0.14 mm² ... 0.34 mm² | DOS-1208-GA01 | 6045001 |
|  | • **Connection type head A:** Female connector, M12, 8-pin, straight<br>• **Connection type head B:** Flying leads<br>• **Signal type:** Incremental, SSI<br>• **Cable:** 20 m, 8-wire, PUR, halogen-free<br>• **Description:** Incremental, shieldedSSI<br>• **Connection systems:** Flying leads | DOL-1208-G20MAC1 | 6032869 |
|  | • **Connection type head A:** Female connector, M12, 8-pin, straight<br>• **Connection type head B:** Flying leads<br>• **Signal type:** Incremental, SSI<br>• **Cable:** 10 m, 8-wire, PUR, halogen-free<br>• **Description:** Incremental, shieldedSSI<br>• **Connection systems:** Flying leads | DOL-1208-G10MAC1 | 6032868 |
|  | • **Connection type head A:** Female connector, M12, 8-pin, straight<br>• **Connection type head B:** Flying leads<br>• **Signal type:** Incremental, SSI<br>• **Cable:** 5 m, 8-wire, PUR, halogen-free<br>• **Description:** Incremental, shieldedSSI<br>• **Connection systems:** Flying leads | DOL-1208-G05MAC1 | 6032867 |
|  | • **Connection type head A:** Female connector, M12, 8-pin, straight<br>• **Connection type head B:** Flying leads<br>• **Signal type:** Incremental, SSI<br>• **Cable:** 2 m, 8-wire, PUR, halogen-free<br>• **Description:** Incremental, shieldedSSI<br>• **Connection systems:** Flying leads | DOL-1208-G02MAC1 | 6032866 |

# SICK AT A GLANCE

SICK is one of the leading manufacturers of intelligent sensors and sensor solutions for industrial applications. A unique range of products and services creates the perfect basis for controlling processes securely and efficiently, protecting individuals from accidents and preventing damage to the environment.

We have extensive experience in a wide range of industries and understand their processes and requirements. With intelligent sensors, we can deliver exactly what our customers need. In application centers in Europe, Asia and North America, system solutions are tested and optimized in accordance with customer specifications. All this makes us a reliable supplier and development partner.

Comprehensive services complete our offering: SICK LifeTime Services provide support throughout the machine life cycle and ensure safety and productivity.

**For us, that is “Sensor Intelligence.”**

# WORLDWIDE PRESENCE:

Contacts and other locations –www.sick.com