Data sheet



DL50-N2228

Dx50

TIME-OF-FLIGHT SENSORS

SICK
Sensor Intelligence.



Ordering information

Type	part no.
DL50-N2228	1058987

Other models and accessories ➜ www.sick.com/Dx50

Detailed technical data

Features

Measuring range	200 mm ... 50,000 mm, on “diamond grade” reflective tape
Target	Reflector
Resolution	0.1 mm
Repeatability	≥ 0.25 mm [1) 2) 3)]
Measurement accuracy	± 3 mm [4)]
Response time	10 ms ... 160 ms, 10 ms / 40 ms / 160 ms [2) 5)]
Output time	2.5 ms [6)]
Light source	Laser, red
Type of light	Visible red light
Laser class	1 (IEC 60825-1:2014, EN 60825-1:2014) [7)]
Typ. light spot size (distance)	15 mm x 15 mm (10 m)
Additional function	Set moving average fast/medium/slow Switching mode: distance to object (Dt0) Teach-in, scaling and inversion of digital output Set hysteresis Multifunctional input and output: Laser off, external teach, digital output 2, deactivated Adjustable resolution of the SSI distance output: 0.0625 mm / 0.1 mm / 0.125 mm / 1 mm Unique measurement value Crosstalk safety Switch-off display Reset to factory default Lock user interface

1) Equivalent to 1 σ.
2) Dependent on the averaging setting: fast/medium/slow.
3) Typical value.
4) 200 mm ... 4,000 mm: ≤ ± 5 mm.
5) Lateral entry of the object into the measuring range.
6) Continuous change of distance in measuring range.
7) Wavelength: 658 nm; max. output: 80 mW; pulse duration: 2.5 ns; duty cycle: 1/240.

Average laser service life (at 25 °C)	100,000 h
Safety-related parameters	
$MTTF_D$	101 years
DC_{avg}	0%

[1] Equivalent to 1 σ.
[2] Dependent on the averaging setting: fast/medium/slow.
[3] Typical value.
[4] 200 mm ... 4,000 mm: ≤ ± 5 mm.
[5] Lateral entry of the object into the measuring range.
[6] Continuous change of distance in measuring range.
[7] Wavelength: 658 nm; max. output: 80 mW; pulse duration: 2.5 ns; duty cycle: 1/240.

Interfaces

SSI	✓
Digital output	
Number	1 ... 2 [1) 2)]
Type	NPN
Function	Dependent on the set function MF: digital output 2 / laser off, external teach
Maximum output current I_A	≤ 100 mA
Multifunctional input (MF)	– / 1 x [3) 4) 5)]
Hysteresis	1 mm ... 1,000 mm

[1] Output Q short-circuit protected.
[2] NPN: HIGH = < 2.5 V / LOW = V_S.
[3] Dependent on the set function MF: digital output 2 / laser off, external teach.
[4] Response time ≤ 60 ms.
[5] NPN: HIGH = ≤ 2.5 V / LOW = V_S.

Electronics

Supply voltage U_B	DC 10 V ... 30 V [1)]
Power consumption	≤ 2.1 W [2)]
Ripple	≤ 5 V_{pp} [3)]
Initialization time	≤ 250 ms
Warm-up time	≤ 15 min
Display	LC display, 2 x LED
Enclosure rating	IP65
Protection class	III

[1] Limit values, reverse-polarity protected, operation in short-circuit protected network: max. 8 A.
[2] Without load.
[3] May not fall short of or exceed V_S tolerances.

Mechanics

Dimensions (W x H x D)	36.1 mm x 62.7 mm x 57.7 mm
Housing material	Metal (zinc diecast)
Window material	Plastic (PMMA)
Weight	200 g
Connection type	Male connector, M12, 8-pin

Ambient data

Ambient temperature, operation	–30 °C ... +65 °C –30 °C ... +80 °C, operation with 2 cooling plates –30 °C ... +140 °C, operation with 2 cooling plates and protection filter
Ambient temperature, storage	–40 °C ... +75 °C
Max. rel. humidity (not condensing)	≤ 95 %
Typ. Ambient light immunity	40,000 lx
Vibration resistance	EN 60068-2-6, EN 60068-2-64
Shock resistance	EN 60068-2-27

Classifications

ECLASS 5.0	27270801
ECLASS 5.1.4	27270801
ECLASS 6.0	27270801
ECLASS 6.2	27270801
ECLASS 7.0	27270801
ECLASS 8.0	27270801
ECLASS 8.1	27270801
ECLASS 9.0	27270801
ECLASS 10.0	27270801
ECLASS 11.0	27270801
ECLASS 12.0	27270916
ETIM 5.0	EC001825
ETIM 6.0	EC001825
ETIM 7.0	EC001825
ETIM 8.0	EC001825
UNSPSC 16.0901	41111613

Certificates

EU declaration of conformity	✓
UK declaration of conformity	✓
ACMA declaration of conformity	✓
Moroccan declaration of conformity	✓
China-RoHS	✓
cULus certificate	✓

Dimensional drawing

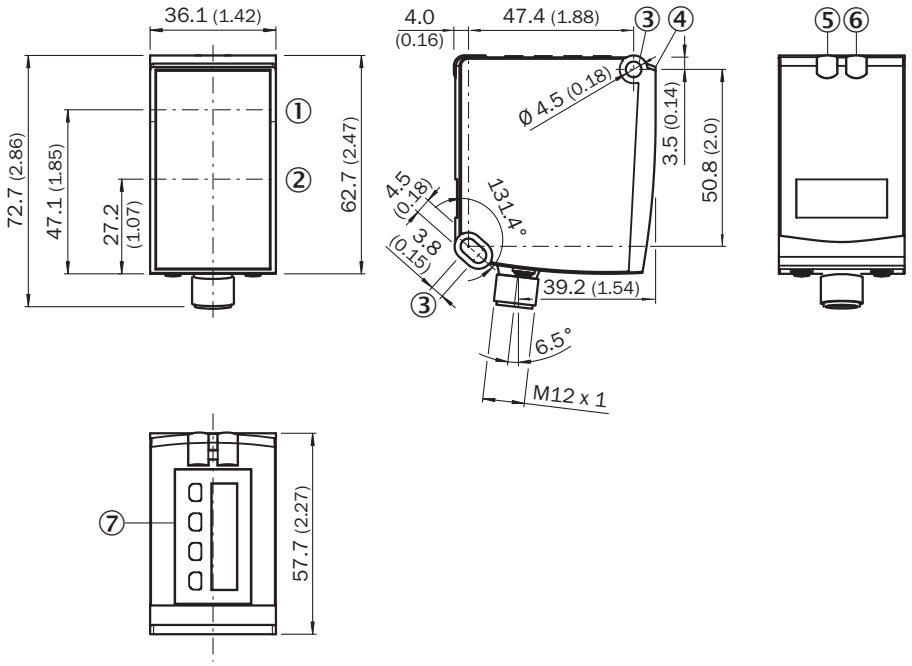

Dimensions in mm (inch)
① optical axis, sender
② optical axis, receiver
③ fixing hole
④ Reference surface = 0 mm
⑤ Status indicator digital output Q_1 (orange)
⑥ DT50/DT50 Hi/DL50: Status display for supply voltage active (green), DS50/DL50 Hi: Status display of digital output Q_2 (orange)
⑦ Control elements and display

Connection type Male connector M12, 8-pin

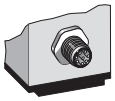

Connection diagram

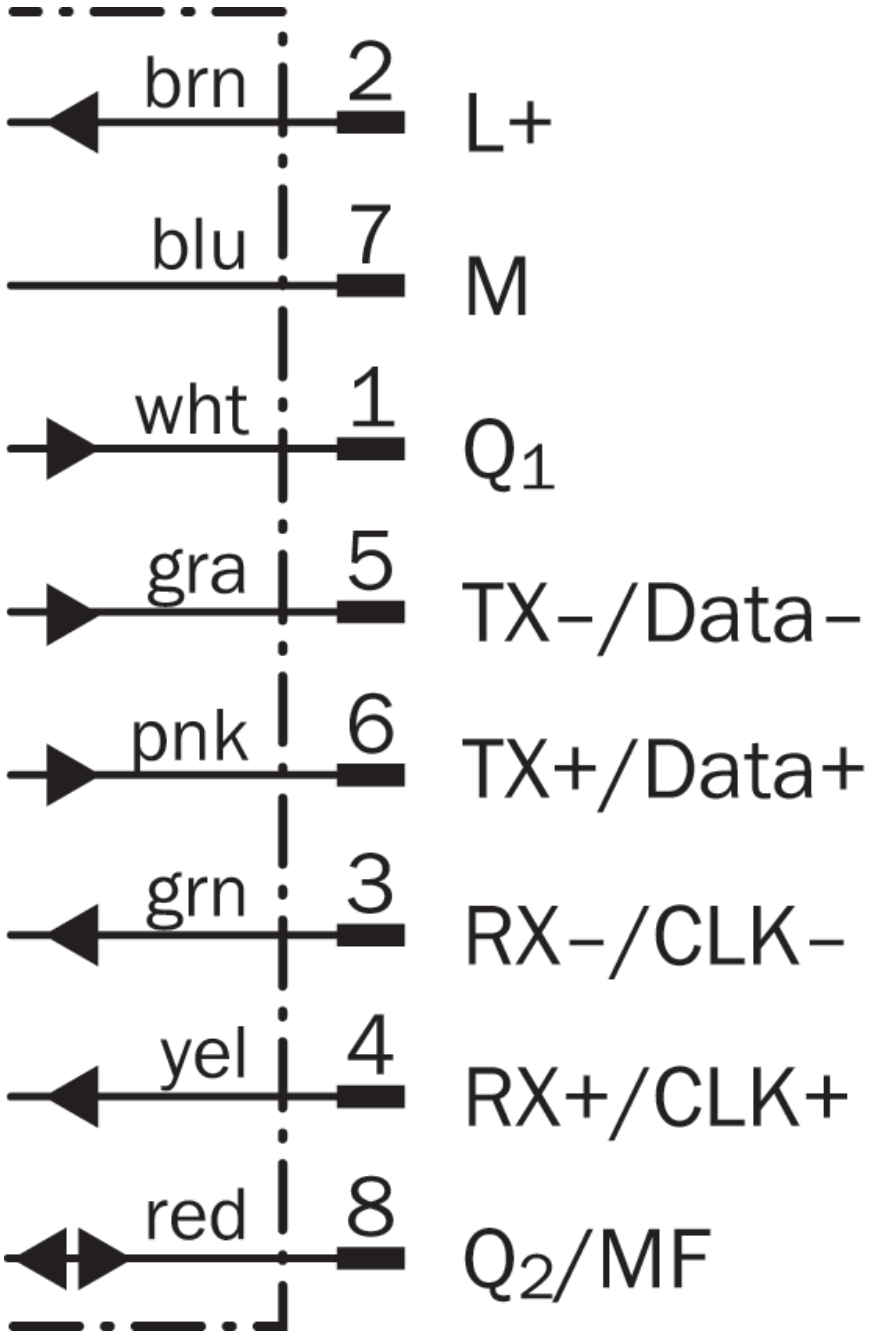

Recommended accessories

Other models and accessories ➜ www.sick.com/Dx50

	Brief description	Type	part no.
device protection and care			
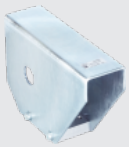	• **Description:** Weather Cover for Dx35/Dx50/Dx50-2/Dx80	OBW-KHS-M02	2050205
	• **Description:** Cooling plate for Dx50/Dx50-2/DT20 (for water cooling) • **Usable for:** Dx50	BEF-KP-Dx50/DT20	2055755
	• **Description:** Thermal shield for Dx50 with NIR filter, for use with 2x cold plate BEF-KP-Dx50/DT20	Heat protection filter for Dx50	2057137
Mounting systems			
	• **Description:** Alignment unit • **Material:** Steel • **Details:** Steel, zinc coated • **Items supplied:** Mounting hardware for the sensor included	BEF-AH-DX50	2048397
reflectors and optics			
	• **Description:** Reflector plate, “diamond grade” reflective tape, 330 mm x 330 mm, base plate material: aluminum, screw connection • **Ambient operating temperature:** –34 °C ... +70 °C	PL240DG	1017910
connectors and cables			
	• **Connection type head A:** Female connector, M12, 8-pin, straight • **Connection type head B:** Flying leads • **Cable:** 2 m, 8-wire, PUR, halogen-free • **Description:** Shielded • **Connection systems:** Flying leads	YF2A68-020XXXXLEAX	6032448

SICK AT A GLANCE

SICK is one of the leading manufacturers of intelligent sensors and sensor solutions for industrial applications. A unique range of products and services creates the perfect basis for controlling processes securely and efficiently, protecting individuals from accidents and preventing damage to the environment.

We have extensive experience in a wide range of industries and understand their processes and requirements. With intelligent sensors, we can deliver exactly what our customers need. In application centers in Europe, Asia and North America, system solutions are tested and optimized in accordance with customer specifications. All this makes us a reliable supplier and development partner.

Comprehensive services complete our offering: SICK LifeTime Services provide support throughout the machine life cycle and ensure safety and productivity.

For us, that is “Sensor Intelligence.”

WORLDWIDE PRESENCE:

Contacts and other locations –www.sick.com