

Valve Connector Cordset

VMB-2+P/Z2-0,6M-PVC-V1-W

- Valve connector according EN 175301-803 A/ISO 4400
- Z diode as a protective circuit
- Built-in LED, as operating and function indicator
- Moulded seal
- Flame resistant cable
- Oil resistant
- Immunity to vibration

Valve connector Form B, Z-diode LED 2-pin+PE to M12 plug angled A-coded 3-pin, PVC cable black

Dimensions

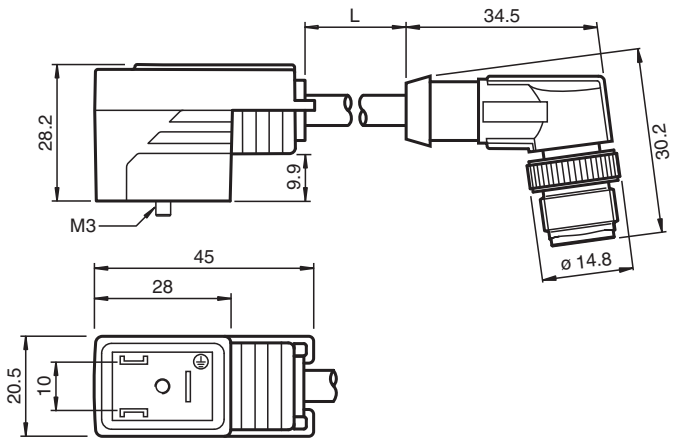

Technical Data

General specifications		
Connector 1		
Connection		Valve connector DIN
Construction type		form B
Style		angled
Locking		screw connection
Number of pins		2 + PE
Connector 2		
Connection		plug
Construction type		M12
Style		angled
Locking		screw connection
Number of pins		3
Coding		A-coded
Indicators/operating means		
LED yellow		Operating display
Electrical specifications		

Release date: 2025-02-04 Date of issue: 2025-02-04 Filename: 254104_eng.pdf

Technical Data

Operating voltage	U_B	24 V AC/DC
Operating current	I_B	max. 4 A
Suppression		Zener diode
Conformity		
Degree of protection		EN 60529
Plug connection		Valve connector : DIN EN 175301-803 connector M12 x 1 : IEC 61076-2-101
Flammability		DIN VDE 0482 , DIN EN 50265-2-1 , UL 94
Oil resistance		DIN EN 60811-2-1
Ambient conditions		
Ambient temperature		
Connector 1		-20 ... 85 °C (-4 ... 185 °F)
Connector 2		-25 ... 90 °C (-13 ... 194 °F)
Cable, fixed installation		-40 ... 80 °C (-40 ... 176 °F)
Cable, flexing		-5 ... 80 °C (23 ... 176 °F)
Pollution degree		3
Mechanical specifications		
Connector 1		
Tightening torque		0.6 Nm
Tool installation		screw M3 x 29
Mating cycles		min. 100
Connector 2		
Tightening torque		0.6 Nm
Tool installation		straight knurling
Mating cycles		min. 100
Degree of protection		IP65 / IP67
Cable		according to IEC/EN 60228 (DIN VDE 0295) class 5
Sheath diameter		4.8 mm
Bending radius		> 10 x cable diameter, movable installation > 5 x cable diameter, fixed installation
Sheath color		black (similar to RAL 9005)
Number of cores		3
Core cross section		0.5 mm^2
Cores color		Core 1-4: black Core 2-3: black Core PE-5: green/yellow
Core construction		16 x 0.2 mm Ø
Length	L	0.6 m
Cable code		Li YY 3 x 0,50
Mass		54 g
Material		
Connector 1		
Body		TPU, black
Seal		TPU , molded
Contact surface		Sn
Flammability		V-0
Connector 2		
Screw connection		Zinc diecast, nickel-plated
Body		TPU, black
Contact surface		Ni/Au
Flammability		HB
Cable		
Sheathing		PVC
Cores		bare copper (Cu)

Release date: 2025-02-04 Date of issue: 2025-02-04 Filename: 254104_eng.pdf

Technical Data

Core insulation	PVC
Oil resistance	good
Flammability	V-0

Connection

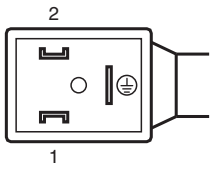

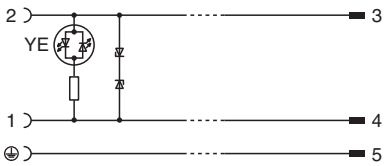

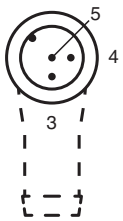

Release date: 2025-02-04 Date of issue: 2025-02-04 Filename: 254104_eng.pdf