Product data sheet

Specifications



Switch, manual, 30A, 3 pole, 10 HP at 575 VAC, three phase, toggle operated, no indicator, NEMA 1 flush mount

2510KF2

Product availability: Non-Stock - Not normally stocked in distribution facility

Main

Product	Single Unit Manual Switch
Type	K

Complementary

Current Rating	30 A
Horsepower Rating	2 hp 115 V AC 1 hp 90 V DC 2 hp 115 V DC 1.5 hp 230 V DC 7.5 hp 230 V AC 10 hp 460 V AC 10 hp 575 V AC
Maximum Voltage Rating	600 V AC 230 V DC
Number of Poles	3P
Control Unit Type	Toggle
Number of Phases	3 phase
Pilot Light	No indicator
Starter Type	Non reversing
Electrical Connection	Screw clamp terminals
Wire Gauge	AWG 14...AWG 10 copper
Height	4.25 in (107.95 mm)
Width	2.44 in (61.98 mm)
Depth	2.75 in (69.85 mm)

Environment

Certifications	UL listed file E42243 CCN NLRV CSA LR25490 class 3211 05
NEMA Enclosure Rating	Not rated (flush plate) painted sheet steel standard size

Ordering and shipping details

Category	US10CP121102
Discount Schedule	0CP1
GTIN	785901554448
Returnability	Yes

Price is “List Price” and may be subject to a trade discount – check with your local distributor or retailer for actual price.

Disclaimer: This documentation is not intended as a substitute for and is not to be used for determining suitability or reliability of these products for specific user applications

Country of origin	MX

Packing Units

Unit Type of Package 1	PCE
Nbr. of units in pkg.	1
Package 1 Height	2.800 in (7.112 cm)
Package 1 Width	4.600 in (11.684 cm)
Package 1 Length	2.00 in (5.08 cm)
Package weight(Lbs)	8.480 oz (240.404 g)

Contractual warranty

Warranty	18 months

Environmental Data

Schneider Electric aims to achieve Net Zero status by 2050 through supply chain partnerships, lower impact materials, and circularity via our ongoing “Use Better, Use Longer, Use Again” campaign to extend product lifetimes and recyclability.

Environmental Data explained >

How we assess product sustainability >

Environmental footprint

Carbon footprint (kg CO2 eq, Total Life cycle)	49
Environmental Disclosure	Product Environmental Profile

Use Better

Materials and Substances

Packaging made with recycled cardboard	No
Packaging without single use plastic	No
EU RoHS Directive	Not compliant
California proposition 65	WARNING: This product can expose you to chemicals including: Lead and lead compounds, which is known to the State of California to cause cancer and birth defects or other reproductive harm. For more information go to www.P65Warnings.ca.gov
PVC free	Yes

Use Again

Repack and remanufacture

Circularity Profile	No need of specific recycling operations
Take-back	No
WEEE Label	The product must be disposed on European Union markets following specific waste collection and never end up in rubbish bins.

Technical Illustration

Wiring diagram

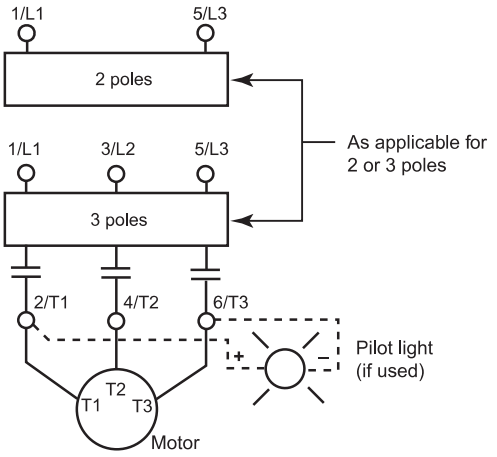

NOTE: The lamp is polarity sensitive in DC applications.