THIS DRAWING IS A CONTROLLED DOCUMENT FOR TYCO ELECTRONICS CORPORATION
IT IS SUBJECT TO CHANGE AND THE CONTROLLING ENGINEERING ORGANIZATION
SHOULD BE CONTACTED FOR THE LATEST REVISION.

LOC	DIST
GW	–

REVISIONS

P	LTR	DESCRIPTION	DATE	DWN	APVD
	A1	SR10-0170-01	26APR2001	BL	KM

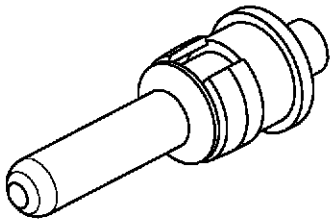

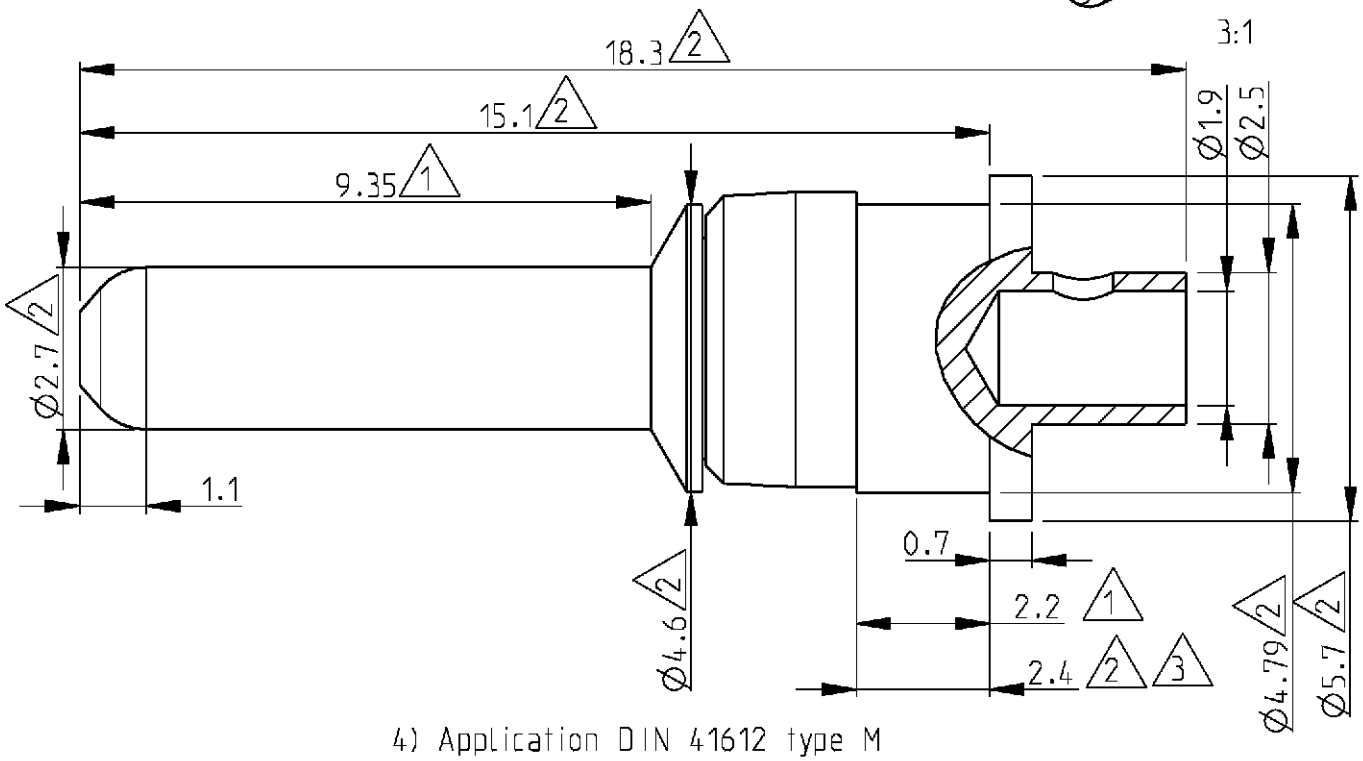

4) Application DIN 41612 type M

3 Measured with spring moved towards the mating face

2 Max dimension

1 Min dimensions

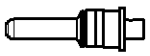

1:1

Cross reference table				
Old part number	Tyco part number	Current	Material	Plating
C42334-A347-A198	3-1393589-5	10 A	Brass	1 µm Au or Pd in contact area

THIS DRAWING IS UNPUBLISHED. RELEASED FOR PUBLICATION 2000
© COPYRIGHT2000 BY TYCO ELECTRONICS CORPORATION. ALL RIGHTS RESERVED.

DIMENSIONS: mm

TOLERANCES UNLESS OTHERWISE SPECIFIED:

0 PLC ±
1 PLC ±
2 PLC ±
3 PLC ±
4 PLC ±
ANGLES ±

DWN B. Lenvain 19APR2001
CHK K. Mattheeuws 19APR2001
APVD R. Leeman 19APR2001
PRODUCT SPEC –
APPLICATION SPEC –
WEIGHT –

MATERIAL –
FINISH –

tyco Electronics
Tyco Electronics
Oostkamp - Belgium

NAME Pre-mating high current plug

SIZE	CAGE CODE	DRAWING NO	RESTRICTED TO
A4	00779	C-3-1393589-5	–

CUSTOMER DRAWING | SCALE 8/1 | SHEET 1 OF 1 | REV A1