2-2170754-3 ✔ ACTIVE

zQSFP+/QSFP28

TE Internal #: 2-2170754-3

QSFP28/56, Cage Assembly, Sealable, Signal, Operating Temperature Range -40 – 85 °C [-40 – 185 °F], Data Rate (Max) 28 Gb/s, 1 Ports

View on TE.com >

Connectors > Pluggable IO Connectors & Cages



Pluggable I/O Product Type: **Cage Assembly**

Sealable: **Yes**

Circuit Application: **Signal**

Operating Temperature Range: **-40 – 85 °C [-40 – 185 °F]**

Data Rate (Max): **28 Gb/s**

Features

Product Type Features

Thermal Accessory Type Included	Heat Sink
Cage Type	Ganged
Pluggable I/O Product Type	Cage Assembly
Sealable	Yes
Form Factor	QSFP28/56

Configuration Features

Number of Rear EONs per Port Column	2
Number of Ports	1
Port Matrix Configuration	1 x 1

Electrical Characteristics

Data Rate (Max)	28 Gb/s

Body Features

Heat Sink Finish	Anodized Black
	.531 in
Heat Sink Height Class	Networking
Heat Sink Style	Pin

Contact Features

PCB Contact Termination Area Plating Material	Tin

Termination Features

Termination Post & Tail Length	2.05 mm[.081 in]
Termination Method to Printed Circuit Board	Through Hole - Press-Fit

Housing Features

Cage Material	Nickel Silver

Dimensions

PCB Thickness (Recommended)	1.57 mm

Usage Conditions

Operating Temperature Range	-40 – 85 °C[-40 – 185 °F]

Operation/Application

Pluggable I/O Applications	SFP+ Stacked Belly-to-Belly
Heat Sink Compatible	Yes
Circuit Application	Signal

Industry Standards

UL Flammability Rating	UL 94V-0

Packaging Features

Packaging Method	Box & Tray

Other

Included Lightpipe	Yes
EMI Containment Feature Type	Elastomeric Gasket

Product Compliance

For compliance documentation, visit the product page on TE.com>

EU RoHS Directive 2011/65/EU	Compliant
EU ELV Directive 2000/53/EC	Compliant
China RoHS 2 Directive MIIT Order No 32, 2016	No Restricted Materials Above Threshold
EU REACH Regulation (EC) No. 1907/2006	Current ECHA Candidate List: JAN 2024 (240) Candidate List Declared Against: JAN 2024 (240) Does not contain REACH SVHC
Halogen Content	Not Low Halogen - contains Br or Cl > 900

	ppm.
Solder Process Capability	Not applicable for solder process capability

Product Compliance Disclaimer

This information is provided based on reasonable inquiry of our suppliers and represents our current actual knowledge based on the information they provided. This information is subject to change. The part numbers that TE has identified as EU RoHS compliant have a maximum concentration of 0.1% by weight in homogenous materials for lead, hexavalent chromium, mercury, PBB, PBDE, DBP, BBP, DEHP, DIBP, and 0.01% for cadmium, or qualify for an exemption to these limits as defined in the Annexes of Directive 2011/65/EU (RoHS2). Finished electrical and electronic equipment products will be CE marked as required by Directive 2011/65/EU. Components may not be CE marked. Additionally, the part numbers that TE has identified as EU ELV compliant have a maximum concentration of 0.1% by weight in homogenous materials for lead, hexavalent chromium, and mercury, and 0.01% for cadmium, or qualify for an exemption to these limits as defined in the Annexes of Directive 2000/53/EC (ELV). Regarding the REACH Regulation, the information TE provides on SVHC in articles for this part number is based on the latest European Chemicals Agency (ECHA) 'Guidance on requirements for substances in articles' posted at this URL: https://echa.europa.eu/guidance-documents/guidance-on-reach

Compatible Parts



TE Part # CAT-C11-Z806726
QSFP28 to QSFP28 Cable Assembly: 30 AWG



TE Part # CAT-C11-N49
QSFP28-Two QSFP28 Cable Assembly: 30 AWG



TE Part # CAT-C11-Z8
QSFP28 to QSFP28 Cable Assembly: 26 AWG



TE Part # CAT-C11-N490333
QSFP28-Four SFP+ Cable Assembly: 30 AWG



TE Part # CAT-C11-N490325
QSFP28-Four SFP+ Cable Assembly: 26 AWG



TE Part # CAT-Q17-N490325
QSFP56 to QSFP56 Cable Assembly: 30 AWG



TE Part # CAT-Q17-N49033
QSFP56-Two QSFP56 Cable Assembly: 30 AWG



TE Part # CAT-C11-Q17
QSFP56 to QSFP56 Cable Assembly: 26 AWG



TE Part # CAT-Q17-N49011
QSFP56-Four SFP56 Cable Assembly: 30 AWG



TE Part # CAT-Q17-N490333
QSFP56-Four SFP56 Cable Assembly: 26 AWG

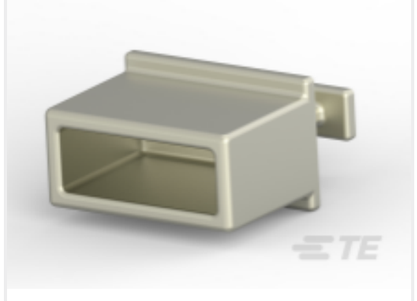

TE Part # 1888810-2
EMI/Dust Cover,XFP And QSFP



TE Part # 1551920-2
zQSFP+ connector assembly

TE Part # 3-2215048-1
ASSY, SEATING TL, QSFP28, 1X1

Also in the Series | zQSFP+/QSFP28

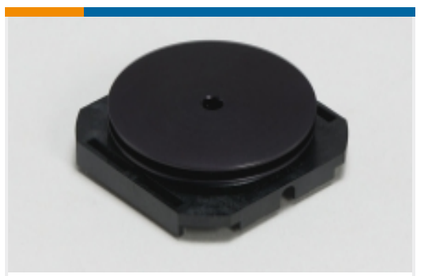

Heat Sinks(7)



Pluggable I/O Cable Assemblies(78)



Pluggable IO Connectors & Cages(424)

Customers Also Bought



TE Part #DT04-2P
REC, 2P, GRY, N



TE Part #DT06-2S
PLG, 2P, GRY, N



TE Part #W2S
Wedgelocks: DEUTSCH DT



TE Part #0460-202-16141
DEUTSCH Solid Contacts



TE Part #282104-1
AMP SUPERSEAL 1.5MM, CONNECTOR HOUSING

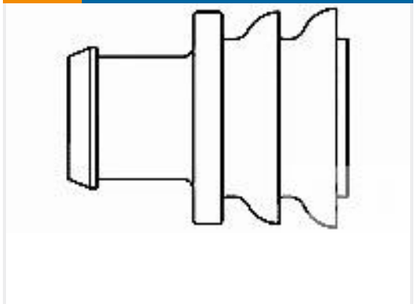

TE Part #281934-2
SINGLE WIRE SEAL



TE Part #114017-ZZ
SEALING PLUG, SIZE 12/16, WHT

Documents

CAD Files

3D PDF

3D

Customer View Model

ENG_CVM_CVM_2-2170754-3_A.2d_dxf.zip

English

Customer View Model

ENG_CVM_CVM_2-2170754-3_A.3d_igs.zip

English

Customer View Model

ENG_CVM_CVM_2-2170754-3_A.3d_stp.zip

English

By downloading the CAD file I accept and agree to the **Terms and Conditions** of use.

Datasheets & Catalog Pages

QSFP28/56 and zQSFP+ Interconnects

English

Product Specifications

Product Specification

English