RECOMMENDED DRILL(ON BUSBAR)

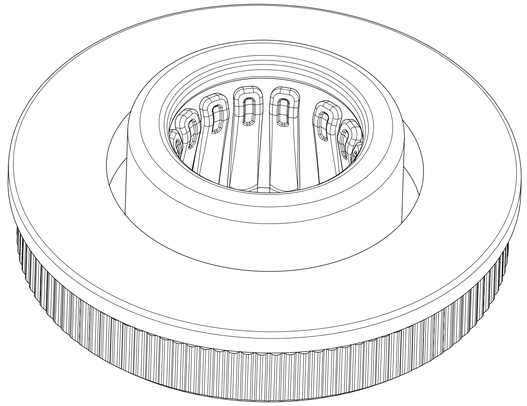

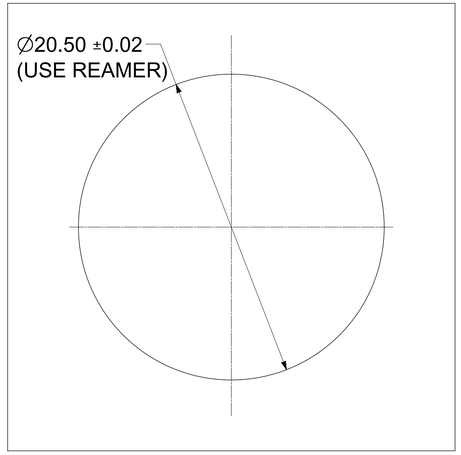

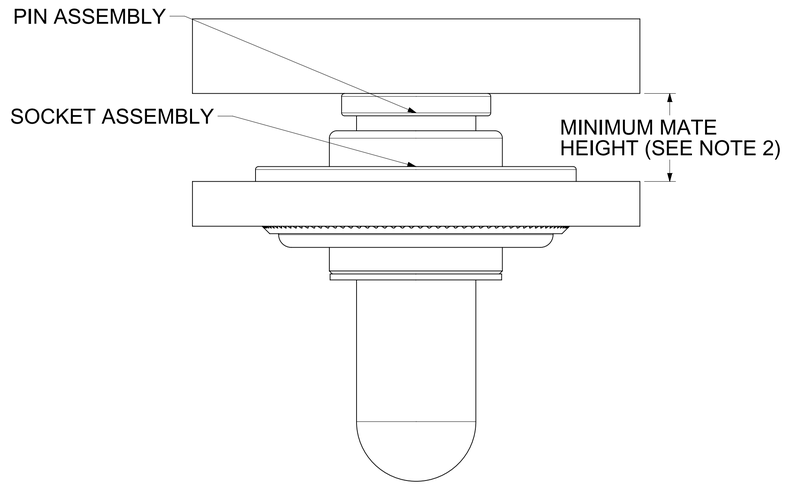

MATING PROFILE

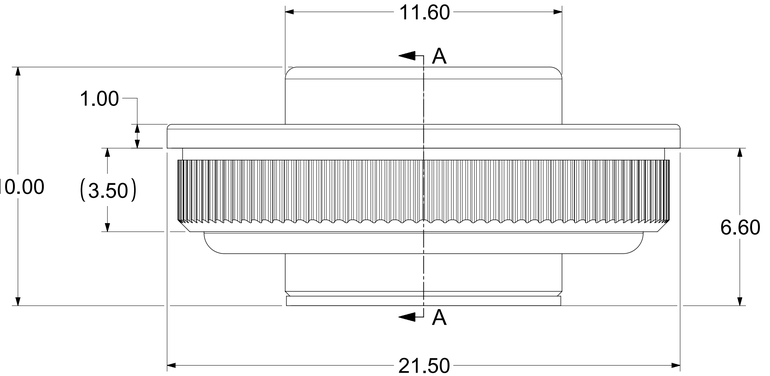

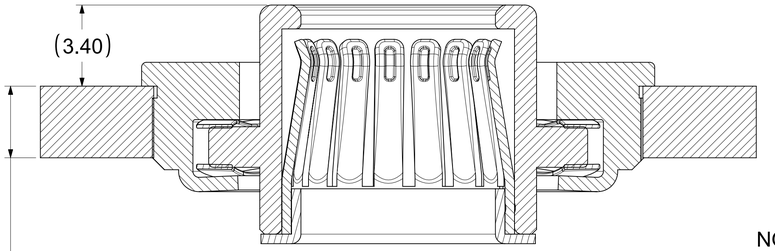

SECTION A-A

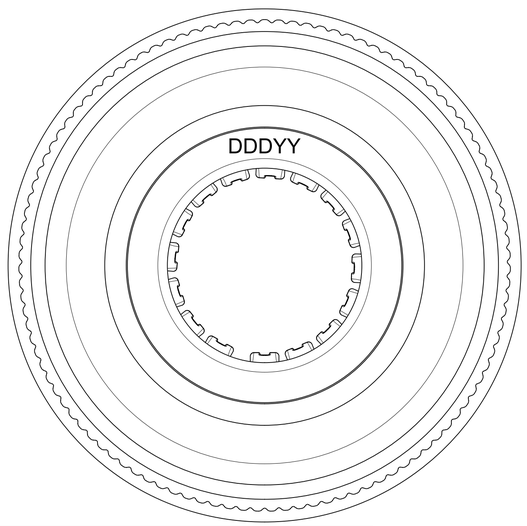

NOTES:

1. MATERIALS:
   BASE METAL: HIGH CONDUCTIVE COPPER ALLOY
   RETENTION CAP: STAINLESS STEEL
   PLATING ON CONTACTS: 0.75 MICRON MIN GOLD OVER 1.27 MICRON MIN NICKEL
   PLATING ON BODY: 3.18 MICRON MIN SILVER OVER 1.27 MICRON MIN NICKEL
2. MATES WITH STANDARD PIN DRAWINGS:
   i. 8.0MM SMT DRAWING 2032633080-SD, MIN. MATING DISTANCE 5.55MM
   ii. 8.0MM PRESS FIT DRAWING 2032630001-SD, MIN. MATING DISTANCE 5.9MM
   iii. 8.0MM SCREW MOUNT DRAWING 2032634185-SD, MIN. MATING DISTANCE 8.9MM
3. PRODUCT SPECIFICATION: 2043130001-PS
4. APPLICATION SPECIFICATION: 2043130001-AS
5. PACKAGING SPECIFICATION: 2043650010-PK
6. SILVER COMPONENTS WILL BE SUPPLIED TARNISH FREE
   BUT MAY TARNISH OVER TIME.
7. DATE CODE TO BE LASER MARKED APPROXIMATELY WHERE SHOWN
   USING DDDYY FORMAT

THIS DRAWING CONTAINS INFORMATION THAT IS PROPRIETARY TO MOLEX ELECTRONIC TECHNOLOGIES, LLC AND SHOULD NOT BE USED WITHOUT WRITTEN PERMISSION

DIMENSION UNITS	SCALE
mm	NTS

GENERAL TOLERANCES (UNLESS SPECIFIED)

ANGULAR TOL	±	0.5 °
4 PLACES	±	
3 PLACES	±	
2 PLACES	±	0.15
1 PLACE	±	0.25
0 PLACES	±	

DRAFT WHERE APPLICABLE MUST REMAIN WITHIN DIMENSIONS

CURRENT REV DESC: UPDATED PCB/BUSBAR HOLE DIMENSION.

EC NO: 749375

DRWN:	SOURAJ	2023/05/12
CHK'D:	SCS02	2023/05/12
APPR:	HTHYAGARAJ	2023/05/15

INITIAL REVISION:

DRWN:	JJONIAK	2017/07/31
APPR:	JJONIAK	2018/06/14

molex

8.0MM SENTRALITY TOP ENTRY PRESS FIT SOCKET WITH FLOAT IN TRAY

PRODUCT CUSTOMER DRAWING

DOCUMENT NUMBER	DOC TYPE	DOC PART	REVISION
2043130010-SD	PSD	000	B2

THIRD ANGLE PROJECTION	DRAWING	SERIES	MATERIAL NUMBER	CUSTOMER	SHEET NUMBER
	D-SIZE	204313	2043130010	GENERAL MARKET	1 OF 1

DOCUMENT STATUS	P1	RELEASE DATE	2023/05/15 07:54:11

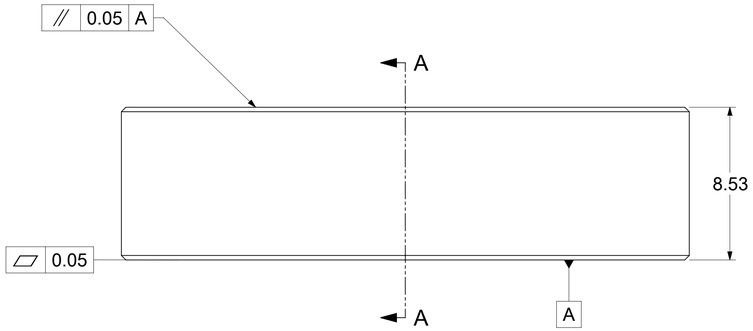

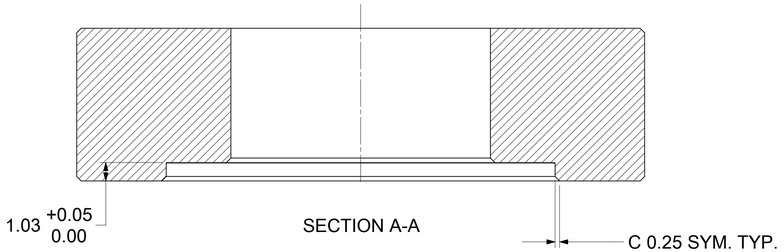

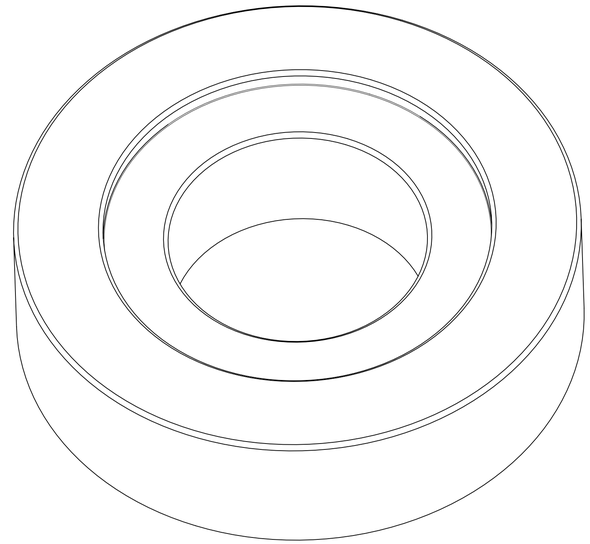

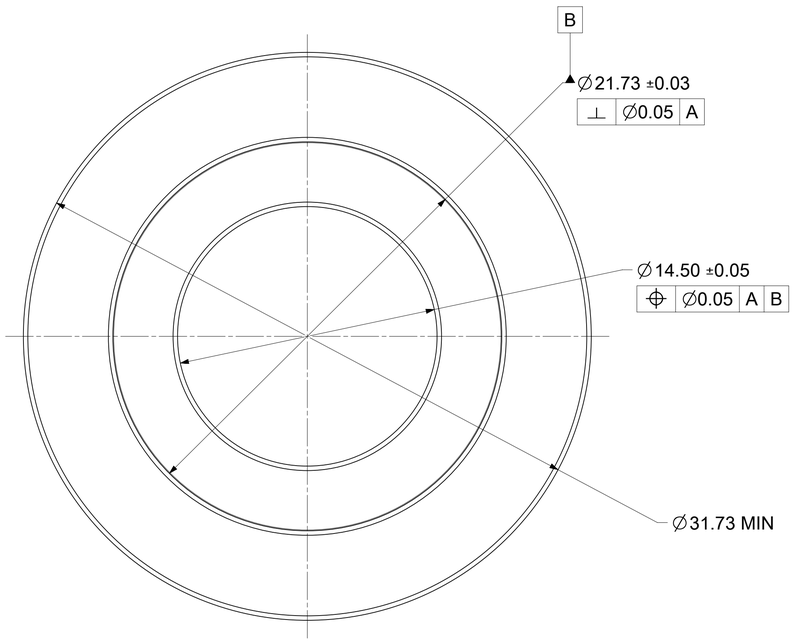

NOTES:
1. MATERIAL: STAINLESS STEEL
2. BREAK ALL SHARP CORNERS AND EDGES

THIS DRAWING CONTAINS INFORMATION THAT IS PROPRIETARY TO MOLEX ELECTRONIC TECHNOLOGIES, LLC AND SHOULD NOT BE USED WITHOUT WRITTEN PERMISSION

DIMENSION UNITS	mm
SCALE	6:1
GENERAL TOLERANCES (UNLESS SPECIFIED)	
ANGULAR TOL	± 0.5 °
4 PLACES	±
3 PLACES	±
2 PLACES	± 0.05
1 PLACE	± 0.1
0 PLACES	±
DRAFT WHERE APPLICABLE MUST REMAIN WITHIN DIMENSIONS	

CURRENT REV DESC: INITIAL RELEASE

EC NO:	771891	
DRWN:	SOURAJ	2022/04/11
CHK'D:	SCS02	2023/12/15
APPR:	KPRASAD	2023/12/19

INITIAL REVISION:

DRWN:	SOURAJ	2022/04/11
APPR:	KPRASAD	2023/12/19

molex

SENTRALITY APPLICATION TOOLING
FOR 8.0MM SOCKET WITH FLOAT

PRODUCT CUSTOMER DRAWING

DOCUMENT NUMBER	DOC TYPE	DOC PART	REVISION
2192590118-SD	PSD	000	A

THIRD ANGLE PROJECTION	DRAWING	SERIES	MATERIAL NUMBER	CUSTOMER	SHEET NUMBER
	D-SIZE	219259	2192590118	GENERAL MARKET	1 OF 1

DOCUMENT STATUS	P1	RELEASE DATE	2023/12/19 10:05:24