SIEMENS

## Data sheet 3VA5195-5ED41-0AA0



circuit breaker 3VA5 UL frame 125 breaking capacity class M 35kA @ 480 V 4-pole, line protection TM210, FTFM, In=15A overload protection Ir=15A fixed short-circuit protection Ii=20 x In N conductor unprotected without connection

| | |
|---|---|
| **Model** | |
| product brand name | SENTRON |
| product designation | Molded-case circuit breaker |
| product designation / according to UL file | MEAS |
| design of the product | System protection |
| design of the load switch / according to UL 489 / Heating, Air Conditioning, and Refrigeration circuit breaker (HACR Type) | Yes |
| design of the load switch / according to UL 489 / High-Intensity-Discharge circuit breaker (HID Type) | Yes |
| design of the load switch / according to UL 489 / Switching Duty circuit breaker (SWD Type) | Yes |
| design of the overcurrent release | TM210 |
| protection function of the overcurrent release | LI |
| number of poles | 4 |
| **General technical data** | |
| insulation voltage / rated value | 800 V |
| operating voltage / at DC / rated value | 600 V |
| operating voltage / at AC / rated value | 690 V |
| power loss [W] / maximum | 10.6 W |
| power loss [W] / for rated value of the current / at AC / in hot operating state / per pole | 3.53 W |
| mechanical service life (operating cycles) / typical | 20 000 |
| electrical endurance (operating cycles) / at AC-1 / at 380/415 V | 8 000 |
| electrical endurance (operating cycles) / at AC-1 / at 690 V | 4 000 |
| electrical endurance (operating cycles) / at 480 V | 8 000 |
| electrical endurance (operating cycles) / at 600 V | 4 000 |
| product feature / for neutral conductors / upgradable/retrofittable / short-circuit and overload proof | No |
| ground-fault monitoring version | without |
| product function | |
| ● communication function | No |
| ● other measurement function | No |
| Net Weight | 952 g |
| **Current** | |
| marking / according to UL 489 / 100%-rated breaker | No |
| operational current | |
| ● at 40 °C | 15 A |
| ● at 45 °C | 15 A |
| ● at 50 °C | 14 A |
| ● at 55 °C | 14 A |
| ● at 60 °C | 14 A |
| ● at 65 °C | 14 A |


Subject to change without notice
© Copyright Siemens

| | |
|---|---|
| ● at 70 °C | 14 A |
| **Switching capacity according to IEC 60947** | |
| switching capacity class of the circuit breaker | M |
| maximum short-circuit current breaking capacity (Icu) | |
| ● at 240 V | 85 kA |
| ● at 415 V | 55 kA |
| ● at 690 V | 7 kA |
| operating short-circuit current breaking capacity (Ics) | |
| ● at 240 V | 85 kA |
| ● at 415 V | 55 kA |
| ● at 690 V | 5 kA |
| short-circuit current making capacity (Icm) | |
| ● at 240 V | 187 kA |
| ● at 415 V | 121 kA |
| ● at 690 V | 11.9 kA |
| design of short-circuit protection | For switching power values in DC networks, see the 3VA molded case circuit breaker device manual; link to be found under Service & Support in the last chapter |
| **Switching capacity according to UL 489** | |
| current breaking capacity | |
| ● at 240 V | 85 kA |
| ● at 480 V | 35 kA |
| ● at 600 Y/347 V | 18 kA |
| **Adjustable parameters** | |
| adjustable response value setting current (Ir) / of the L-trip / with I2t characteristic | |
| ● minimum | 15 A |
| ● maximum | 15 A |
| adjustable response value delay time (tr) / for L-tripping / with I2t characteristic | |
| ● minimum | 1 s |
| ● maximum | 1 s |
| adjustable response value setting current (Ii) / for I-tripping | |
| ● minimum | 300 A |
| ● maximum | 300 A |
| adjustable absolute value setting current (InN) / for N-tripping | |
| ● minimum | 0 A |
| ● maximum | 0 A |
| adjustable current response value current / of the current-dependent overload release | 15 ... 15 A |
| design of the N-conductor protection | Without |
| product function / grounding protection | No |
| **Mechanical Design** | |
| product component | |
| ● undervoltage release | No |
| ● voltage trigger | No |
| ● trip indicator | No |
| height [in] | 5.51 in |
| height | 140 mm |
| width [in] | 4 in |
| width | 101.6 mm |
| depth [in] | 3.01 in |
| depth | 76.5 mm |
| **Connections** | |
| arrangement of electrical connectors / for main current circuit | Without connection |
| type of electrical connection / for main current circuit | Without |
| **Auxiliary circuit** | |
| number of CO contacts / for auxiliary contacts | 0 |
| **Accessories** | |
| product extension / optional / motor drive | Yes |
| **Environmental conditions** | |
| protection class IP / on the front | IP40 |


Subject to change without notice
© Copyright Siemens

| | |
|---|---|
| ambient temperature | |
| ● during operation / minimum | -25 °C |
| ● during operation / maximum | 70 °C |
| ● during storage / minimum | -40 °C |
| ● during storage / maximum | 80 °C |

## Certificates

| | |
|---|---|
| reference code / according to IEC 81346-2 | Q |

### General Product Approval

Confirmation










Miscellaneous

| General Product Approval | EMC | Declaration of Conformity | Test Certificates | |
|---|---|---|---|---|
|  |  |  |  | Special Test Certificate / Type Test Certificates/Test Report |



| Marine / Shipping | | | | | other |
|---|---|---|---|---|---|
|  |  |  |  |  | Miscellaneous |



### other

Confirmation Miscellaneous

## Further information

**Siemens has decided to exit the Russian market (see here).**
https://press.siemens.com/global/en/pressrelease/siemens-wind-down-russian-business
**Siemens is working on the renewal of the current EAC certificates.**
Please contact your local Siemens office on the status of validity of the EAC certification if you intend to import or offer to supply these products to an EAC relevant market (other than the sanctioned EAEU member states Russia or Belarus).
**Information on the packaging**
https://support.industry.siemens.com/cs/ww/en/view/109813875
**Information- and Downloadcenter (Catalogs, Brochures,…)**
http://www.siemens.com/lowvoltage/catalogs
**Industry Mall (Online ordering system)**
https://mall.industry.siemens.com/mall/en/en/Catalog/product?mlfb=3VA5195-5ED41-0AA0
**Service&Support (Manuals, Certificates, Characteristics, FAQs,...)**
https://support.industry.siemens.com/cs/ww/en/ps/3VA5195-5ED41-0AA0
**Image database (product images, 2D dimension drawings, 3D models, device circuit diagrams, ...)**
http://www.automation.siemens.com/bilddb/cax_en.aspx?mlfb=3VA5195-5ED41-0AA0
**CAx-Online-Generator**
http://www.siemens.com/cax
**Tender specifications**
http://www.siemens.com/specifications


Subject to change without notice
© Copyright Siemens

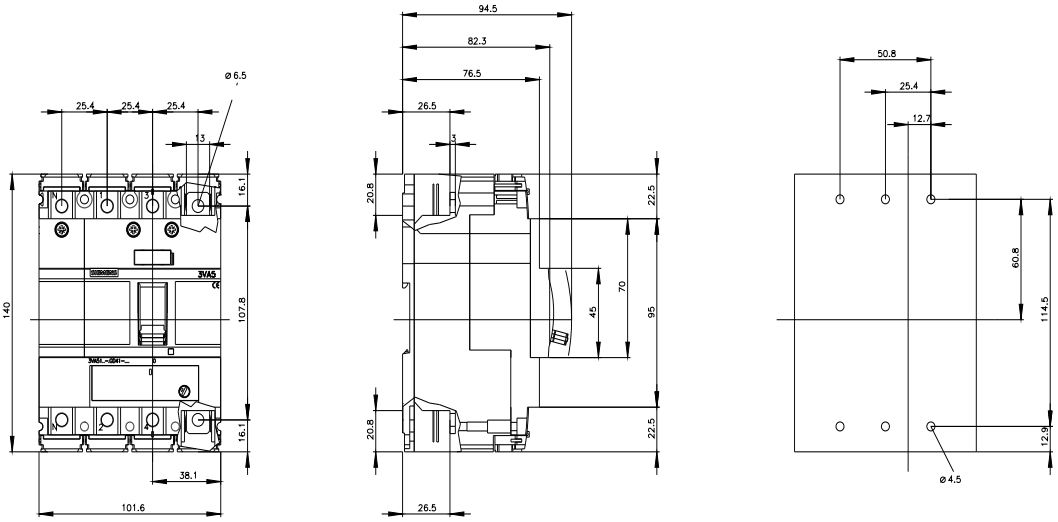


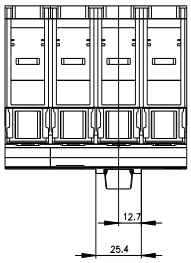


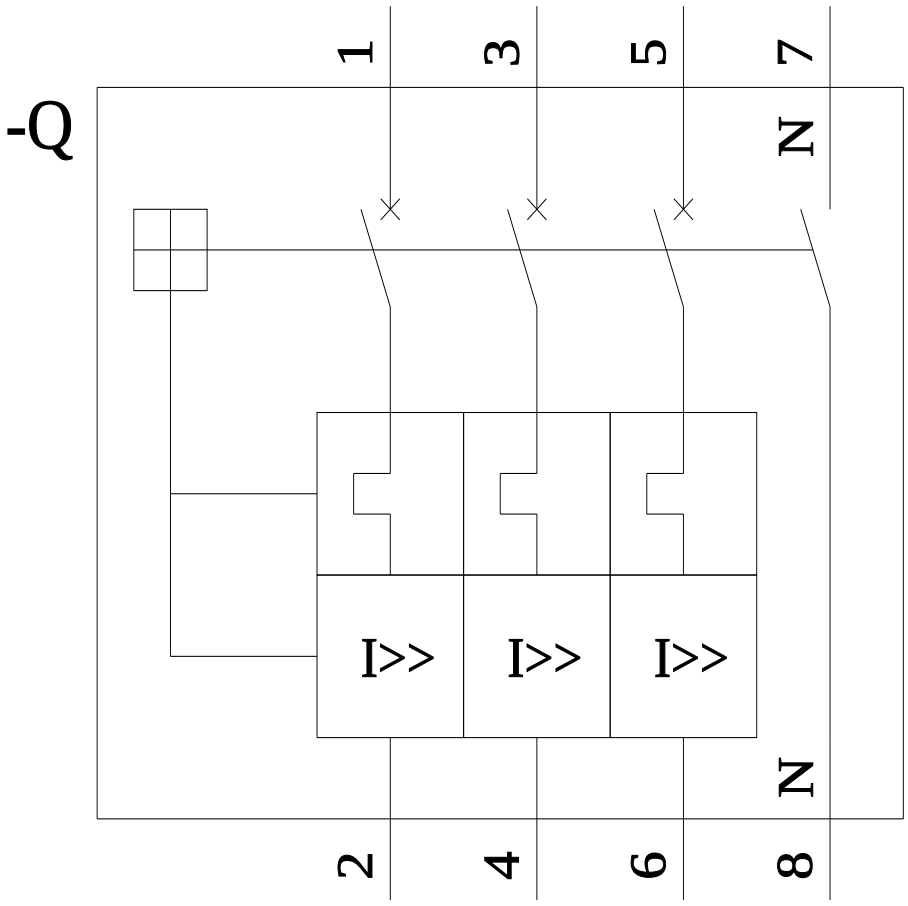



Subject to change without notice
© Copyright Siemens

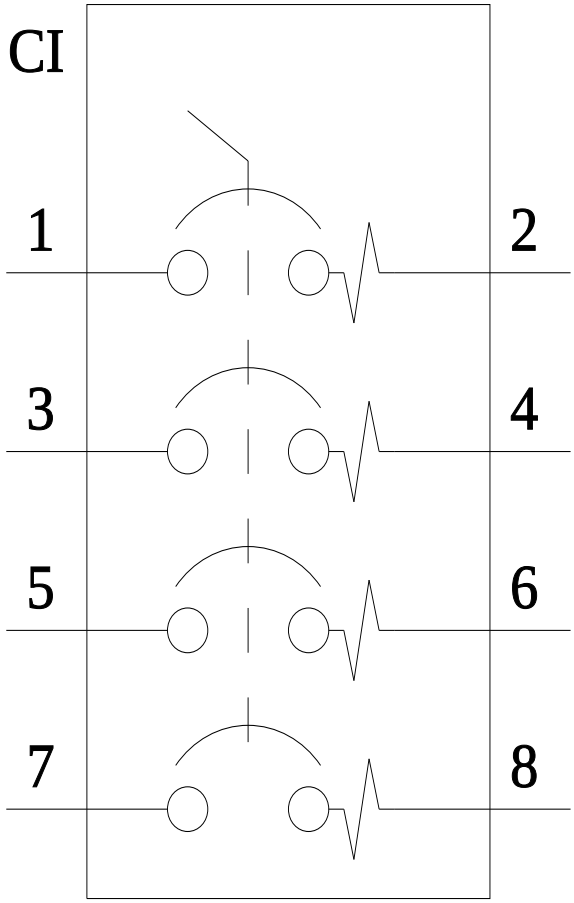


**last modified:** 7/15/2022


Subject to change without notice
© Copyright Siemens

Subject to change without notice
© Copyright Siemens