Silicon NPN Phototransistor

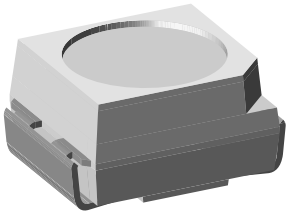

FEATURES

- Package type: surface-mount
- Package form: PLCC-2
- Dimensions (L x W x H in mm): 3.5 x 2.8 x 1.75
- High photo sensitivity
- High radiant sensitivity
- Suitable for visible and near infrared radiation
- Fast response times
- Angle of half sensitivity: φ = ± 60°
- Package notch indicates collector
- Package matched with IR emitter series VSML3710
- Floor life: 168 h, MSL 3, according to J-STD-020
- Lead (Pb)-free reflow soldering
- Material categorization: for definitions of compliance please see www.vishay.com/doc?99912

Pb-free

e3

RoHS COMPLIANT

HALOGEN FREE

GREEN (5-2008)

DESCRIPTION

VEMT3700 is a high speed silicon NPN epitaxial planar phototransistor in a miniature PLCC-2 package for surface mounting on printed boards. The device is sensitive to visible and near infrared radiation.

APPLICATIONS

- Photo interrupters
- Miniature switches
- Counters
- Encoders
- Position sensors
- Ligth sensors

PRODUCT SUMMARY			
COMPONENT	I_{ca} (mA)	φ (°)	$\lambda_{0.1}$ (nm)
VEMT3700	0.5	± 60	450 to 1080

Note

- Test conditions see table “Basic Characteristics”

ORDERING INFORMATION			
ORDERING CODE	PACKAGING	REMARKS	PACKAGE FORM
VEMT3700-GS08	Tape and reel	MOQ: 7500 pcs, 1500 pcs/reel	PLCC-2
VEMT3700-GS18	Tape and reel	MOQ: 8000 pcs, 8000 pcs/reel	PLCC-2

Note

- MOQ: minimum order quantity

ABSOLUTE MAXIMUM RATINGS (T_{amb} = 25 °C, unless otherwise specified)				
PARAMETER	TEST CONDITION	SYMBOL	VALUE	UNIT
Collector emitter voltage		V_{CEO}	70	V
Emitter collector voltage		V_{ECO}	5	V
Collector current		I_C	50	mA
Collector peak current	$t_p/T \leq 0.1$, $t_p \leq 10$ µs	I_{CM}	100	mA
Power dissipation		P_V	100	mW
Junction temperature		T_j	100	°C
Operating temperature range		T_{amb}	- 40 to + 100	°C
Storage temperature range		T_{stg}	- 40 to + 100	°C
Soldering temperature	Acc. reflow solder profile fig. 10	T_{sd}	260	°C
Thermal resistance junction/ambient	Soldered on PCB with pad dimensions: 4 mm x 4 mm	R_{thJA}	400	K/W

For technical questions, contact: detectortechsupport@vishay.com

THIS DOCUMENT IS SUBJECT TO CHANGE WITHOUT NOTICE. THE PRODUCTS DESCRIBED HEREIN AND THIS DOCUMENT ARE SUBJECT TO SPECIFIC DISCLAIMERS, SET FORTH AT www.vishay.com/doc?91000

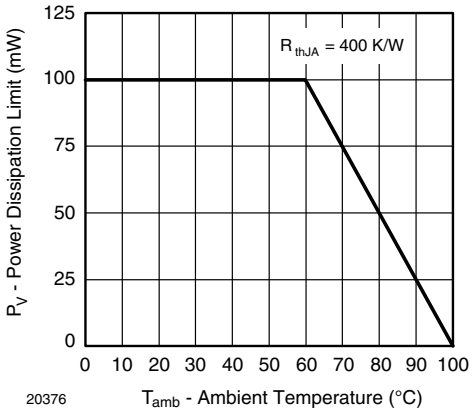

Fig. 1 - Power Dissipation Limit vs. Ambient Temperature

BASIC CHARACTERISTICS (T_{amb} = 25 °C, unless otherwise specified)						
PARAMETER	**TEST CONDITION**	**SYMBOL**	**MIN.**	**TYP.**	**MAX.**	**UNIT**
Collector emitter breakdown voltage	I_C = 1 mA	$V_{(BR)CEO}$	70			V
Collector emitter dark current	V_{CE} = 20 V, E = 0	I_{CEO}		1	200	nA
Collector emitter capacitance	V_{CE} = 5 V, f = 1 MHz, E = 0	C_{CEO}		3		pF
Collector light current	E_e = 1 mW/cm², λ = 950 nm, V_{CE} = 5 V	I_{ca}	0.25	0.5		mA
Angle of half sensitivity		φ		± 60		°
Wavelength of peak sensitivity		λ_p		850		nm
Range of spectral bandwidth		$\lambda_{0.1}$		450 to 1080		nm
Collector emitter saturation voltage	E_e = 1 mW/cm², λ = 950 nm, I_C = 0.1 mA	V_{CEsat}		0.15	0.3	V
Rise time, fall time	V_S = 5 V, I_C = 1 mA, λ = 950 nm, R_L = 1 kΩ	t_r/t_f		6		µs
	V_S = 5 V, I_C = 1 mA, λ = 950 nm, R_L = 100 Ω	t_r/t_f		2		µs
Cut-off frequency	V_S = 5 V, I_C = 2 mA, R_L = 100 Ω	f_c		180		kHz

BASIC CHARACTERISTICS (T_{amb} = 25 °C, unless otherwise specified)

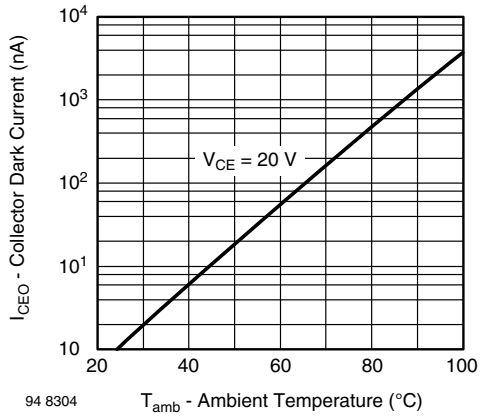

Fig. 2 - Collector Dark Current vs. Ambient Temperature

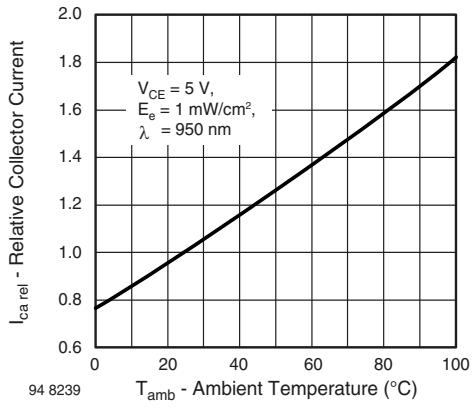

Fig. 3 - Relative Collector Current vs. Ambient Temperature

For technical questions, contact: detectortechsupport@vishay.com

THIS DOCUMENT IS SUBJECT TO CHANGE WITHOUT NOTICE. THE PRODUCTS DESCRIBED HEREIN AND THIS DOCUMENT ARE SUBJECT TO SPECIFIC DISCLAIMERS, SET FORTH AT www.vishay.com/doc?91000

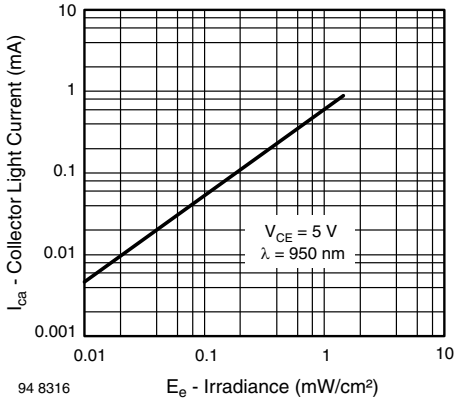

Fig. 4 - Collector Light Current vs. Irradiance

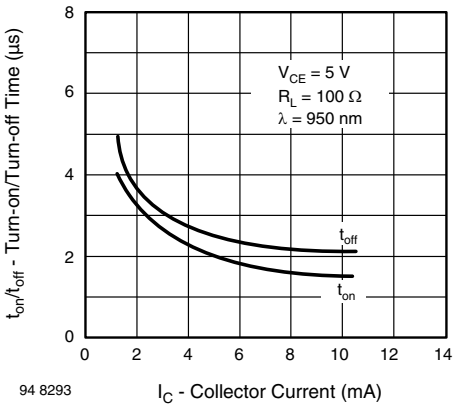

Fig. 7 - Turn-on/Turn-off Time vs. Collector Current

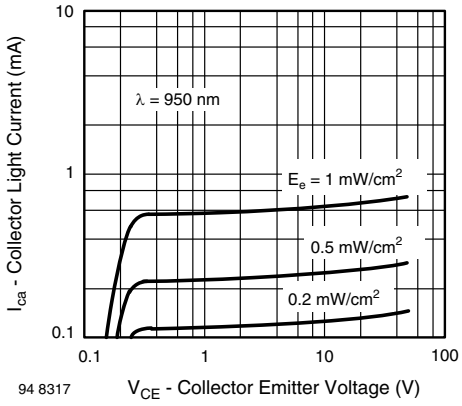

Fig. 5 - Collector Light Current vs. Collector Emitter Voltage

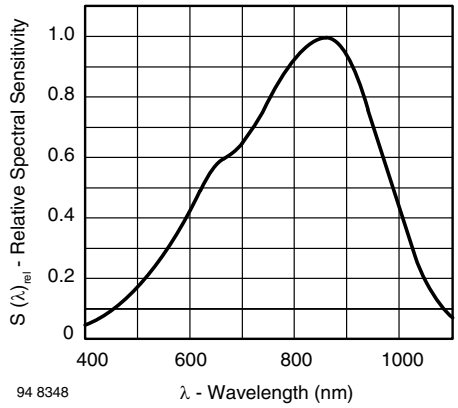

Fig. 8 - Relative Spectral Sensitivity vs. Wavelength

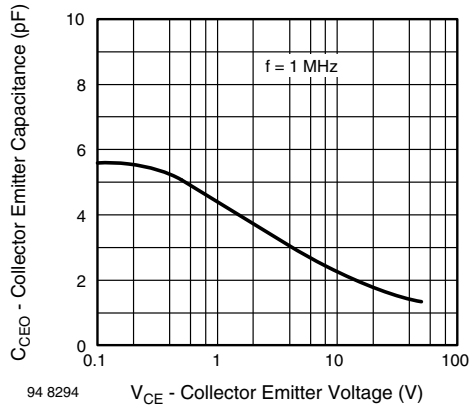

Fig. 6 - Collector Emitter Capacitance vs. Collector Emitter Voltage

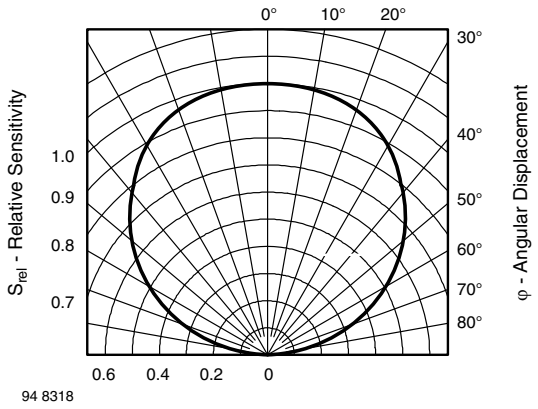

Fig. 9 - Relative Radiant Sensitivity vs. Angular Displacement

For technical questions, contact: detectortechsupport@vishay.com

THIS DOCUMENT IS SUBJECT TO CHANGE WITHOUT NOTICE. THE PRODUCTS DESCRIBED HEREIN AND THIS DOCUMENT ARE SUBJECT TO SPECIFIC DISCLAIMERS, SET FORTH AT www.vishay.com/doc?91000

PACKAGE DIMENSIONS in millimeters

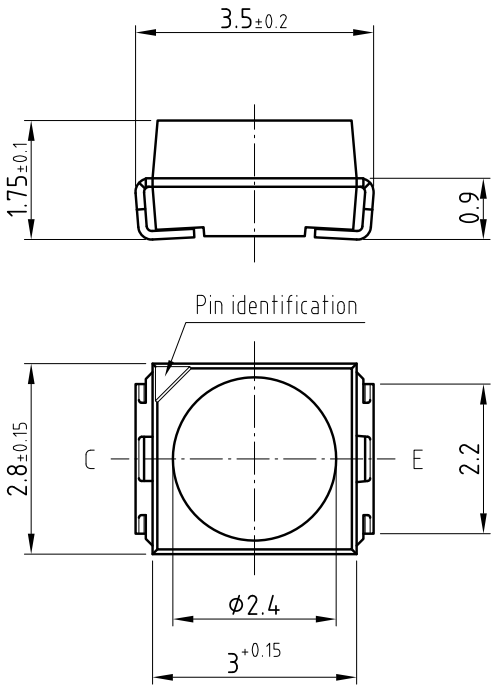

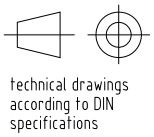

Mounting Pad Layout

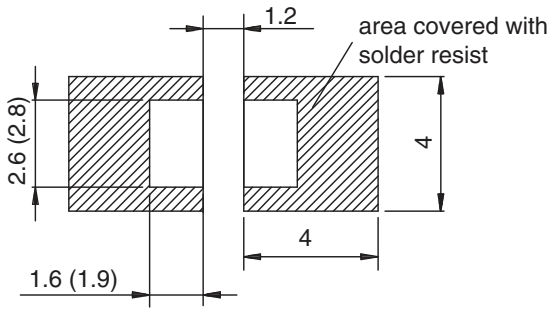

Drawing-No.: 6.541-5067.03-4
Issue: 1; 30.05.07
20873

SOLDER PROFILE

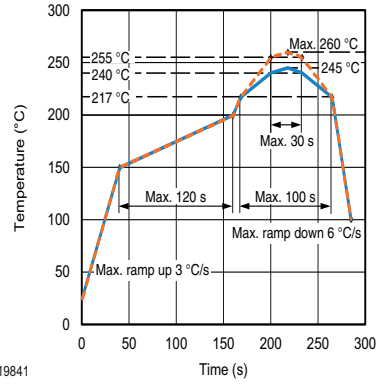

Fig. 10 - Lead (Pb)-free Reflow Solder Profile acc. J-STD-020

DRYPACK

Devices are packed in moisture barrier bags (MBB) to prevent the products from moisture absorption during transportation and storage. Each bag contains a desiccant.

FLOOR LIFE

Floor life (time between soldering and removing from MBB) must not exceed the time indicated on MBB label:
Floor life: 168 h
Conditions: T_{amb} < 30 °C, RH < 60 %
Moisture sensitivity level 3, acc. to J-STD-020.

DRYING

In case of moisture absorption devices should be baked before soldering. Conditions see J-STD-020 or label. Devices taped on reel dry using recommended conditions 192 h at 40 °C (+ 5 °C), RH < 5 %.

For technical questions, contact: detectortechsupport@vishay.com
THIS DOCUMENT IS SUBJECT TO CHANGE WITHOUT NOTICE. THE PRODUCTS DESCRIBED HEREIN AND THIS DOCUMENT ARE SUBJECT TO SPECIFIC DISCLAIMERS, SET FORTH AT www.vishay.com/doc?91000

TAPE AND REEL

PLCC-2 components are packed in antistatic blister tape (DIN IEC (CO) 564) for automatic component insertion. Cavities of blister tape are covered with adhesive tape.

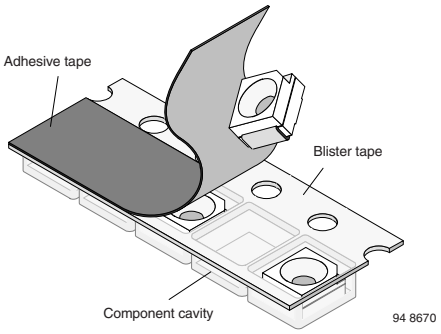

Fig. 11 - Blister Tape

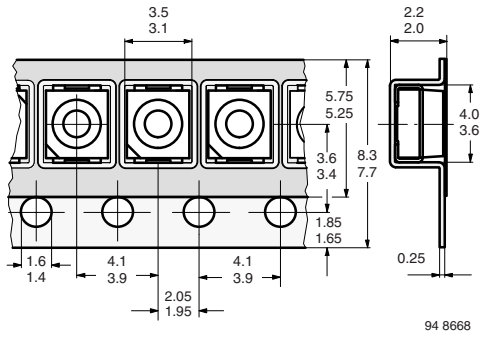

Fig. 12 - Tape Dimensions in mm for PLCC-2

MISSING DEVICES

A maximum of 0.5 % of the total number of components per reel may be missing, exclusively missing components at the beginning and at the end of the reel. A maximum of three consecutive components may be missing, provided this gap is followed by six consecutive components.

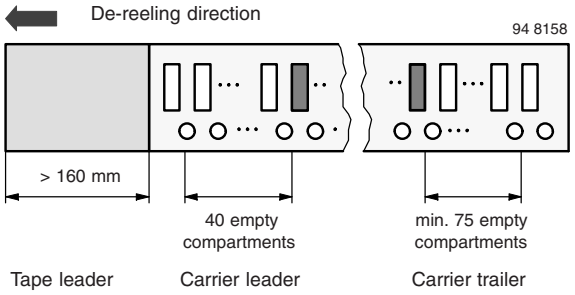

Fig. 13 - Beginning and End of Reel

The tape leader is at least 160 mm and is followed by a carrier tape leader with at least 40 empty compartments. The tape leader may include the carrier tape as long as the cover tape is not connected to the carrier tape. The least component is followed by a carrier tape trailer with a least 75 empty compartments and sealed with cover tape.

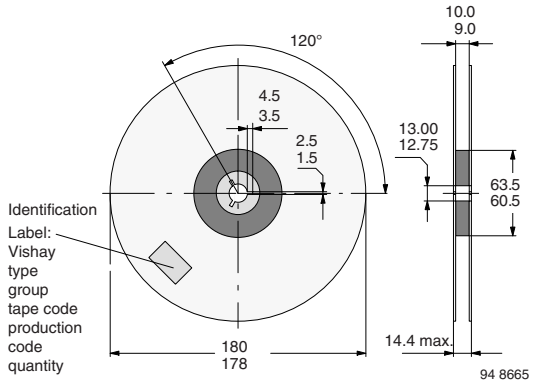

Fig. 14 - Dimensions of Reel-GS08

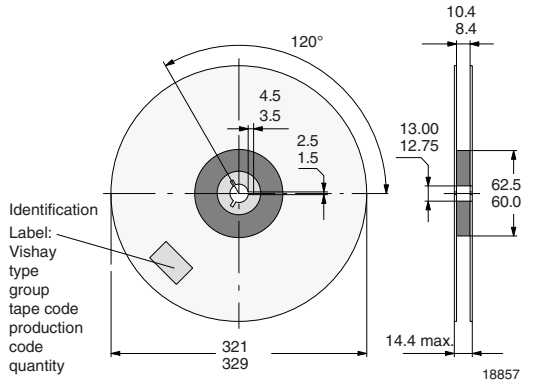

Fig. 15 - Dimensions of Reel-GS18

COVER TAPE REMOVAL FORCE

The removal force lies between 0.1 N and 1.0 N at a removal speed of 5 mm/s. In order to prevent components from popping out of the blisters, the cover tape must be pulled off at an angle of 180° with regard to the feed direction.

For technical questions, contact: detectortechsupport@vishay.com
THIS DOCUMENT IS SUBJECT TO CHANGE WITHOUT NOTICE. THE PRODUCTS DESCRIBED HEREIN AND THIS DOCUMENT ARE SUBJECT TO SPECIFIC DISCLAIMERS, SET FORTH AT www.vishay.com/doc?91000

Disclaimer

ALL PRODUCT, PRODUCT SPECIFICATIONS AND DATA ARE SUBJECT TO CHANGE WITHOUT NOTICE TO IMPROVE RELIABILITY, FUNCTION OR DESIGN OR OTHERWISE.

Vishay Intertechnology, Inc., its affiliates, agents, and employees, and all persons acting on its or their behalf (collectively, “Vishay”), disclaim any and all liability for any errors, inaccuracies or incompleteness contained in any datasheet or in any other disclosure relating to any product.

Vishay makes no warranty, representation or guarantee regarding the suitability of the products for any particular purpose or the continuing production of any product. To the maximum extent permitted by applicable law, Vishay disclaims (i) any and all liability arising out of the application or use of any product, (ii) any and all liability, including without limitation special, consequential or incidental damages, and (iii) any and all implied warranties, including warranties of fitness for particular purpose, non-infringement and merchantability.

Statements regarding the suitability of products for certain types of applications are based on Vishay's knowledge of typical requirements that are often placed on Vishay products in generic applications. Such statements are not binding statements about the suitability of products for a particular application. It is the customer's responsibility to validate that a particular product with the properties described in the product specification is suitable for use in a particular application. Parameters provided in datasheets and / or specifications may vary in different applications and performance may vary over time. All operating parameters, including typical parameters, must be validated for each customer application by the customer's technical experts. Product specifications do not expand or otherwise modify Vishay's terms and conditions of purchase, including but not limited to the warranty expressed therein.

Hyperlinks included in this datasheet may direct users to third-party websites. These links are provided as a convenience and for informational purposes only. Inclusion of these hyperlinks does not constitute an endorsement or an approval by Vishay of any of the products, services or opinions of the corporation, organization or individual associated with the third-party website. Vishay disclaims any and all liability and bears no responsibility for the accuracy, legality or content of the third-party website or for that of subsequent links.

Vishay products are not designed for use in life-saving or life-sustaining applications or any application in which the failure of the Vishay product could result in personal injury or death unless specifically qualified in writing by Vishay. Customers using or selling Vishay products not expressly indicated for use in such applications do so at their own risk. Please contact authorized Vishay personnel to obtain written terms and conditions regarding products designed for such applications.

No license, express or implied, by estoppel or otherwise, to any intellectual property rights is granted by this document or by any conduct of Vishay. Product names and markings noted herein may be trademarks of their respective owners.

© 2025 VISHAY INTERTECHNOLOGY, INC. ALL RIGHTS RESERVED

THIS DOCUMENT IS SUBJECT TO CHANGE WITHOUT NOTICE. THE PRODUCTS DESCRIBED HEREIN AND THIS DOCUMENT ARE SUBJECT TO SPECIFIC DISCLAIMERS, SET FORTH AT www.vishay.com/doc?91000