T520H158M006ATE035

T520, Tantalum, Polymer Tantalum, 1,500 uF, 20%, 6.3 VDC, SMD, Polymer, Molded, Low Profile/ESR, NonCombustible, 35 mOhms, 7360, 2mm

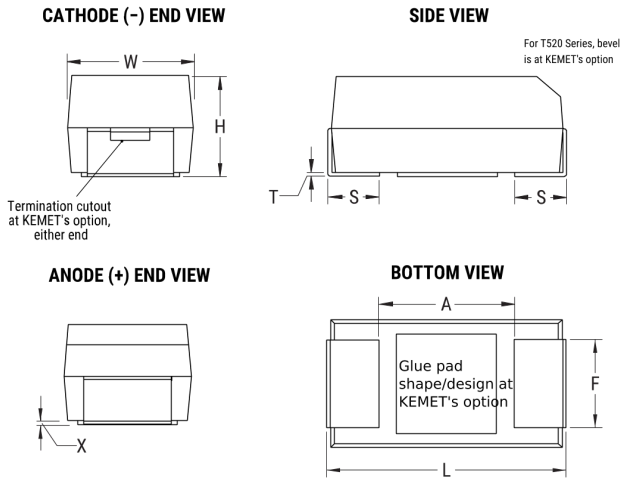

Click here for the 3D model.

Dimensions	
Footprint	7360
L	7.3mm +/-0.3mm
W	6mm +/-0.3mm
H	1.9mm +/-0.1mm
T	0.13mm REF
S	1.3mm +/-0.3mm
F	4.1mm +/-0.1mm
A	3.3mm MIN
X	0.1mm +/-0.1mm

Packaging Specifications	
Packaging	T&R, 178mm
Packaging Quantity	1000

General Information	
Series	T520
Dielectric	Polymer Tantalum
Style	SMD Chip
Description	SMD, Polymer, Molded, Low Profile/ESR, NonCombustible
Features	Low ESR
RoHS	Yes
Termination	Tin
AEC-Q200	No
Typical Component Weight	384.64 mg
Shelf Life	52 Weeks
MSL	3

Specifications	
Capacitance	1,500 uF
Capacitance Tolerance	20%
Voltage DC	6.3 VDC (85C)
Temperature Range	-55/+85°C
Rated Temperature	85°C
Life	2000 Hrs (85C)
Humidity	60C, 90% RH, 500 Hours, No Load
Dissipation Factor	20% 120Hz 25C
Failure Rate	N/A
ESR	35 mOhms (100kHz 25C)
Ripple Current	2320 mA (rms, 100kHz 45C), 1624 mA (rms, 85C)
Leakage Current	945 uA (5min 25°C)

Statements of suitability for certain applications are based on our knowledge of typical operating conditions for such applications, but are not intended to constitute - and we specifically disclaim - any warranty concerning suitability for a specific customer application or use. This Information is intended for use only by customers who have the requisite experience and capability to determine the correct products for their application. Any technical advice inferred from this Information or otherwise provided by us with reference to the use of our products is given gratis, and we assume no obligation or liability for the advice given or results obtained.

© 2006 - 2024 KEMET