E AB A 180X130X100 20TB - Junction box

3002004

https://www.phoenixcontact.com/us/products/3002004

Please be informed that the data shown in this PDF document is generated from our online catalog. Please find the complete data in the user documentation. Our general terms of use for downloads are valid.



Junction box, With 20 terminal blocks, 2.5 mm^2 with screw connection technology, material: ABS, gray, 180 mm x 130 mm x 100 mm, type of locking: Screw-on cover

Your advantages

- Terminal box with cover and pre-assembled terminal strip
- Fast wiring without the need for additional components

Commercial data

Item number	3002004
Packing unit	1 pc
Minimum order quantity	1 pc
Sales key	BH91
Product key	BH8231
Catalog page	Page 649 (C-3-2019)
GTIN	4055626083872
Weight per piece (including packing)	798 g
Weight per piece (excluding packing)	798 g
Customs tariff number	85371098
Country of origin	IN

Technical data

Product properties

Product type	Terminal box

Insulation characteristics

Protection class	II

Dimensions

Dimensional drawing	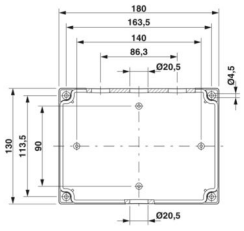
Width	180 mm
Height	130 mm
Depth	100 mm

Material specifications

Color	gray
Material	ABS
Flammability rating according to UL 94	UL-94 HB
Seal material	Silicon
Type of insulation	Full protective insulation
Components	halogen-free

Mechanical properties

General

Type of locking (GRP)	Screw-on cover Phillips-Recess

Environmental and real-life conditions

Ambient conditions

Ambient temperature (operation)	-25 °C ... 60 °C

Mounting

Assembly instructions	Screw connection in housing base

Drawings

Dimensional drawing

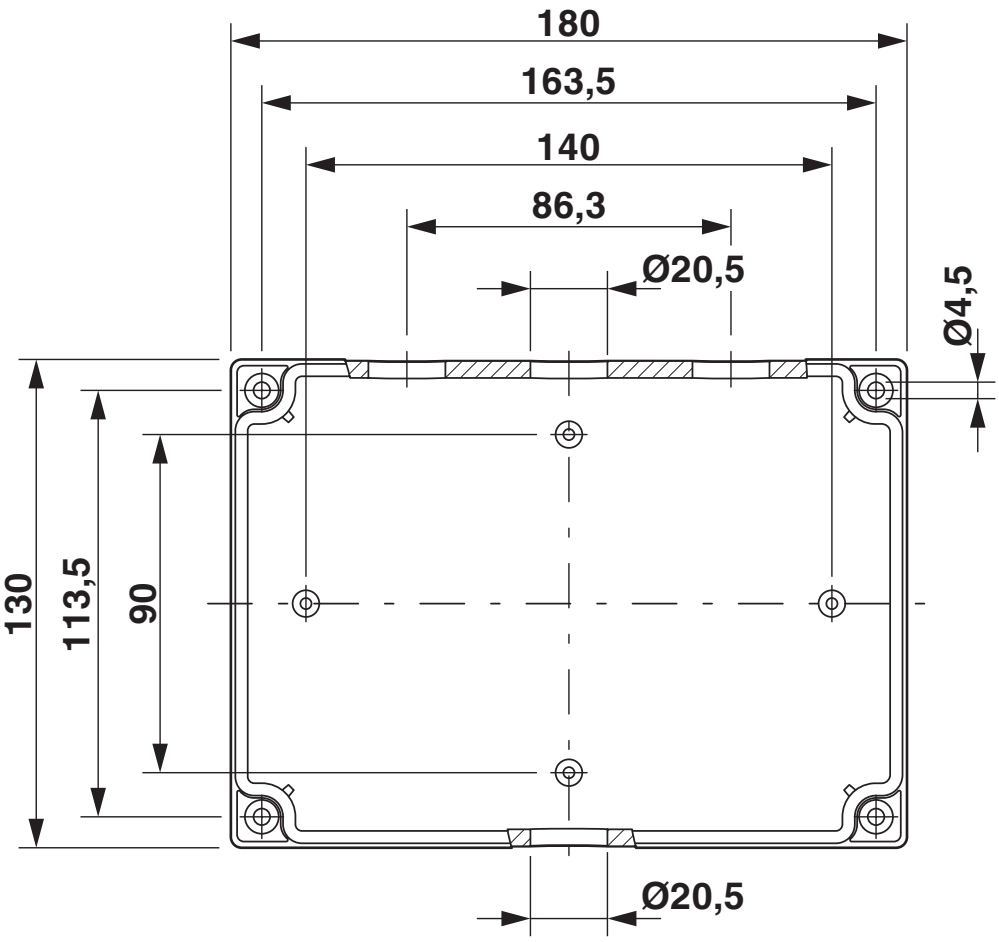

Approvals

To download certificates, visit the product detail page: https://www.phoenixcontact.com/us/products/3002004

EAC
Approval ID: RU C-DE.A*30.B.01742

EAC
Approval ID: RU C-DE.BL08.B.00582

Classifications

ECLASS

ECLASS-11.0	27180101
ECLASS-12.0	27180101
ECLASS-13.0	27180101

ETIM

ETIM 9.0	EC000261

UNSPSC

UNSPSC 21.0	31261500

Phoenix Contact 2024 © - all rights reserved
https://www.phoenixcontact.com

Phoenix Contact USA
586 Fulling Mill Road
Middletown, PA 17057, United States
(+717) 944-1300
info@phoenixcon.com