HC-M-03-PT-F - Contact insert module

1424218

https://www.phoenixcontact.com/us/products/1424218

Please be informed that the data shown in this PDF document is generated from our online catalog. Please find the complete data in the user documentation. Our general terms of use for downloads are valid.



Contact insert module, number of positions: 3, power contacts: 3, control contacts: 0, Socket, Push-in connection, 690 V, 40 A, 2.5 mm^2 ... 6 mm^2, application: Power

Your advantages

- Easy installation without tools, even when mounted, with push-in connection technology
- Shortest installation time compared to other connection technologies
- Quick and effortless wiring, in particular when space is tight
- Automatic cabling with robots possible
- Safe wiring and operation with color-coded actuators
- Shock and vibration-resistant in accordance with DIN EN 61373

Commercial data

Item number	1424218
Packing unit	1 pc
Minimum order quantity	1 pc
Sales key	BF62
Product key	BF7ACE
GTIN	4055626368696
Weight per piece (including packing)	27.9 g
Weight per piece (excluding packing)	22.22 g
Customs tariff number	85366990
Country of origin	CN

Technical data

Notes

General	for flexible conductors with or without ferrules
General	Connectors may be operated only when there is no load/voltage.
General	For HEAVYCON housing type B6 ... B48 and module carrier frame HC-M-B...MF-...

Mounting

Assembly instructions	To ensure correct use, installation in housing with IP54 protection or better is required

Product properties

Product type	Modular contact insert
Series	HC-M-03
Application	Power
Number of positions	3
Connection profile	3
Number of module slots	1
No. of power contacts	3
No. of control contacts	0
Contact material type	rolled

Insulation characteristics

Overvoltage category	III
Degree of pollution	3

Connection data

Connection technology

Connection technology	Push-in connection
Connection in acc. with standard	IEC / EN

Conductor connection

Conductor cross section	2.5 mm² ... 6 mm²
Connection cross section AWG	14 ... 10
Stripping length of the individual wire	12 mm

Dimensions

Mechanical characteristics

Minimum housing height	72 mm
Contact diameter	4 mm

Electrical properties

Rated voltage (III/2) contacts	1000 V

Rated voltage (III/3)	690 V
Rated surge voltage (III/2)	8 kV
Rated surge voltage (III/3)	6 kV
Rated surge voltage	6 kV
Rated current	40 A

Mechanical properties

Mechanical data

Insertion/withdrawal cycles	≥ 500

Material specifications

Flammability rating according to UL 94	V0
Contact material	Copper alloy
Contact surface material	Ag
Contact carrier material	PC
Standards/regulations	PC: Fire protection in rail vehicles - requirement sets R22, R23, and R24 acc. to DIN EN 45545-2 (Risk level HL1 - HL3)

Environmental and real-life conditions

Ambient conditions

Ambient temperature (operation)	-40 °C ... 125 °C

Standards and regulations

Testing

Standards/regulations	PC: Fire protection in rail vehicles - requirement sets R22, R23, and R24 acc. to DIN EN 45545-2 (Risk level HL1 - HL3)

Drawings

Schematic diagram

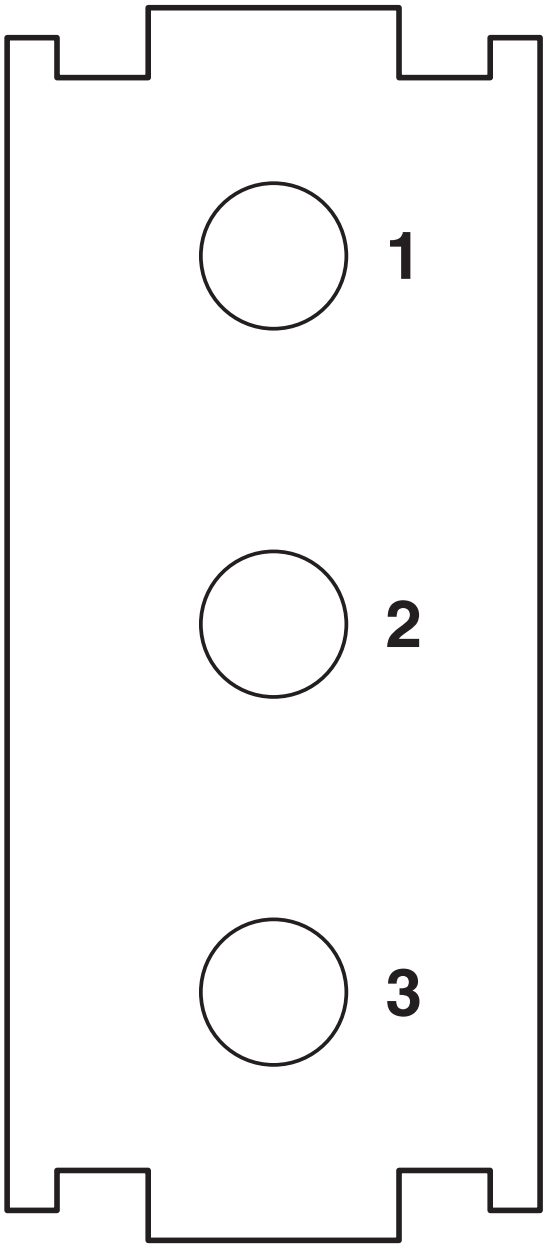

Connector pin assignment, connection side

Diagram

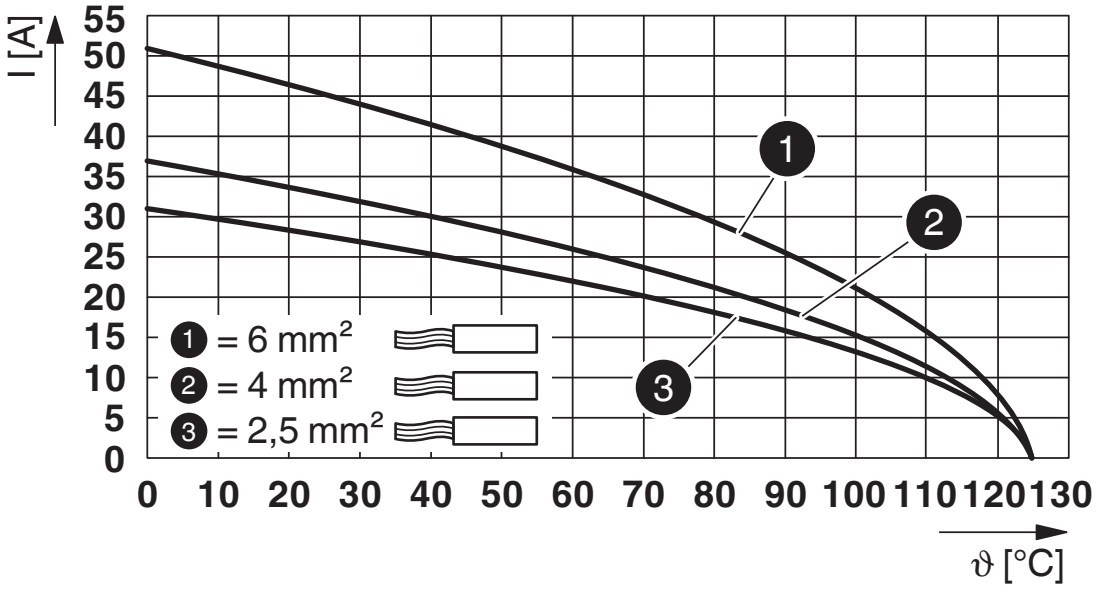

Derating diagram for flexible conductors

Diagram

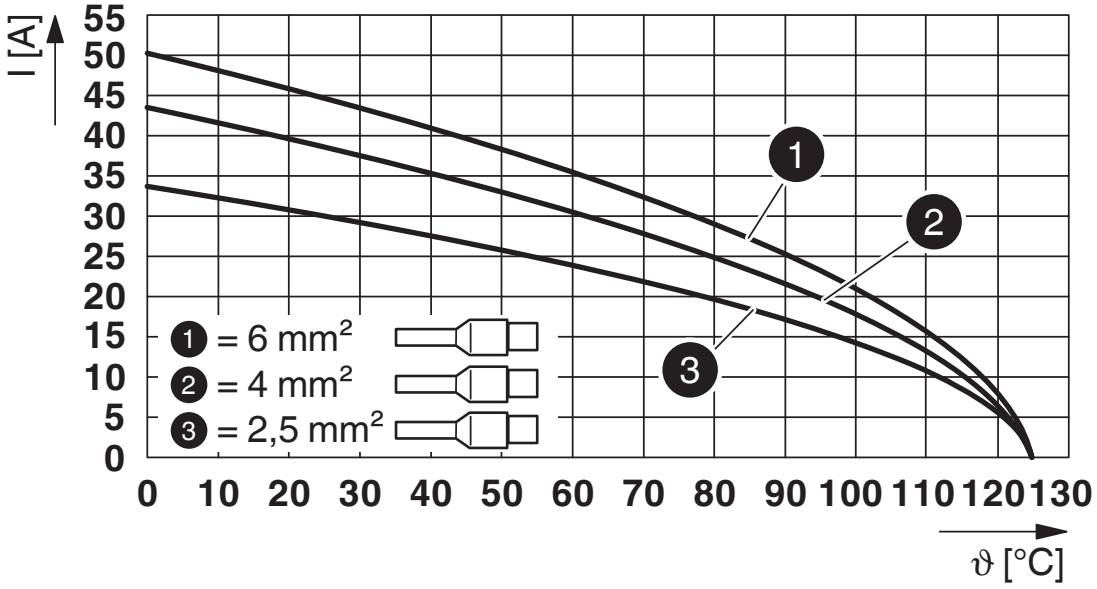

Derating diagram for flexible conductors with ferrule

Dimensional drawing

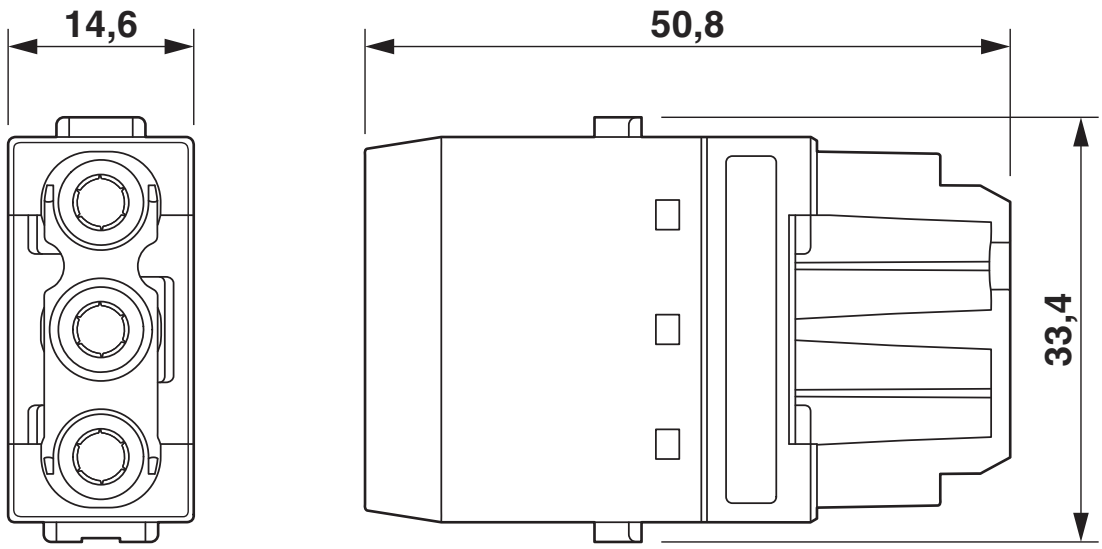

Dimensional drawing

Approvals

To download certificates, visit the product detail page: https://www.phoenixcontact.com/us/products/1424218

cULus Recognized
Approval ID: E468743

	Nominal voltage U_N	Nominal current I_N	Cross section AWG	Cross section mm^2
	600 V	30 A	- 10	-

Classifications

ECLASS

ECLASS-11.0	27440217
ECLASS-12.0	27440217
ECLASS-13.0	27440217

ETIM

ETIM 8.0	EC000438

UNSPSC

UNSPSC 21.0	39121400

Environmental product compliance

EU RoHS

Fulfills EU RoHS substance requirements	Yes, No exemptions

China RoHS

Environment friendly use period (EFUP)	EFUP-E
	No hazardous substances above the limits

EU REACH SVHC

REACH candidate substance (CAS No.)	No substance above 0.1 wt%

Accessories

HC-CBU-MOD - Coding element

1636130

https://www.phoenixcontact.com/us/products/1636130



Coding socket for coding up to 16 connectors, for HC Modular

HC-CST-MOD - Coding element

1636127

https://www.phoenixcontact.com/us/products/1636127



Coding peg for coding up to 16 connectors, for HC Modular

HC-M-B06-MFH-B - Module carrier frame

1182085

https://www.phoenixcontact.com/us/products/1182085



Module carrier frame, size: B6, type : for the panel mounting side (a, b, c, ...), 4 mm^2 ... 6 mm^2, application: Module carrier frame

HC-M-B10-MFH-B - Module carrier frame

1182088

https://www.phoenixcontact.com/us/products/1182088



Module carrier frame, size: B10, type : for the panel mounting side (a, b, c, ...), 4 mm^2 ... 6 mm^2, application: Module carrier frame

HC-M-B16-MFH-B - Module carrier frame

1182090

https://www.phoenixcontact.com/us/products/1182090



Module carrier frame, size: B16, type : for the panel mounting side (a, b, c, ...), 4 mm^2 ... 6 mm^2, application: Module carrier frame

HC-M-B24-MFH-B - Module carrier frame

1182094

https://www.phoenixcontact.com/us/products/1182094



Module carrier frame, size: B24, type : for the panel mounting side (a, b, c, ...), 4 mm^2 ... 6 mm^2, application: Module carrier frame

HC-M-B06-MFH-H - Module carrier frame

1182087

https://www.phoenixcontact.com/us/products/1182087



Module carrier frame, size: B6, type : for the sleeve side (A, B, C, ...), 4 mm^2 ... 6 mm^2, application: Module carrier frame

HC-M-B10-MFH-H - Module carrier frame

1182089

https://www.phoenixcontact.com/us/products/1182089



Module carrier frame, size: B10, type : for the sleeve side (A, B, C, ...), 4 mm^2 ... 6 mm^2, application: Module carrier frame

HC-M-B16-MFH-H - Module carrier frame

1182093

https://www.phoenixcontact.com/us/products/1182093

Module carrier frame, size: B16, type : for the sleeve side (A, B, C, ...), 4 mm^2 ... 6 mm^2, application: Module carrier frame



HC-M-B24-MFH-H - Module carrier frame

1182095

https://www.phoenixcontact.com/us/products/1182095

Module carrier frame, size: B24, type : for the sleeve side (A, B, C, ...), 4 mm^2 ... 6 mm^2, application: Module carrier frame



HC-M-03-PT-F - Contact insert module

1424218

https://www.phoenixcontact.com/us/products/1424218

HC-M-03-PT-M - Contact insert module

1424219

https://www.phoenixcontact.com/us/products/1424219



Contact insert module, number of positions: 3, power contacts: 3, control contacts: 0, Pin, Push-in connection, 690 V, 40 A, 2.5 mm^2 ... 6 mm^2, application: Power

CF CRIMPHANDY 0,5 - Electrical crimping tool

1212463

https://www.phoenixcontact.com/us/products/1212463



Mobile handheld device, battery-powered, for processing on-tape ferrules 0.5 mm^2 with functional end, suitable for PVC insulated conductors (H05V-K), incl. battery, charger, CUTFOX 12 cable cutter, waste guide plate 2, service tool for error correction, and one strip of ferrules 0.5 mm^2, packed in a robust case.

CF CRIMPHANDY 0,75 - Electrical crimping tool

1212464

https://www.phoenixcontact.com/us/products/1212464



Mobile handheld device, battery-powered, for processing on-tape ferrules 0.75 mm^2 with functional end, suitable for PVC insulated conductors (H05V-K), incl. battery, charger, CUTFOX 12 cable cutter, waste guide plate 2, service tool for error correction, and one strip of ferrules 0.75 mm^2, packed in a robust case.

CF CRIMPHANDY 1,0 - Electrical crimping tool

1212465

https://www.phoenixcontact.com/us/products/1212465



Mobile handheld device, battery-powered, for processing on-tape ferrules 1.0 mm^2 with functional end, suitable for PVC insulated conductors (H05V-K), incl. battery, charger, CUTFOX 12 cable cutter, waste guide plate 2, service tool for error correction, and one strip of ferrules 1.0 mm^2, packed in a robust case.

CF CRIMPHANDY 1,5 - Electrical crimping tool

1212466

https://www.phoenixcontact.com/us/products/1212466



Mobile handheld device, battery-powered, for processing on-tape ferrules 1.5 mm^2 with functional end, suitable for PVC insulated conductors (H07V-K), incl. battery, charger, CUTFOX 12 cable cutter, waste guide plate 2, service tool for error correction, and one strip of ferrules 1.5 mm^2, packed in a robust case.

CRIMPFOX 6 - Crimping pliers

1212034

https://www.phoenixcontact.com/us/products/1212034



Crimping pliers, for ferrules without insulating collar according to DIN 46228 Part 1 and ferrules with insulating collar according to DIN 46228 Part 4, 0.25 mm^2 ... 6.0 mm^2, lateral entry, trapezoidal crimp

HC-M-03-PT-F - Contact insert module

1424218

https://www.phoenixcontact.com/us/products/1424218

CRIMPFOX CENTRUS 10S - Crimping pliers

1213154

https://www.phoenixcontact.com/us/products/1213154



Crimping pliers, for uninsulated and insulated ferrules, DIN 46228 Part 1 and 4, from 0.14 mm^2 ... 10 mm^2, also for TWIN ferrules up to 2 x 4 mm^2, automatic cross section adjustment, lateral insertion, equipped with fall protection

CRIMPFOX CENTRUS 6S - Crimping pliers

1213144

https://www.phoenixcontact.com/us/products/1213144



Crimping pliers, for uninsulated and insulated ferrules, DIN 46228 Part 1 and 4, from 0.14 mm^2 ... 6 mm^2, also for TWIN ferrules up to 2 x 4 mm^2, automatic cross section adjustment, lateral insertion, equipped with fall protection

Phoenix Contact 2024 © - all rights reserved
https://www.phoenixcontact.com

Phoenix Contact USA
586 Fulling Mill Road
Middletown, PA 17057, United States
(+717) 944-1300
info@phoenixcon.com