TWO ROW – BOARD-TO-CRIMP REMOVABLE

RM2
0.075" I 10 THROUGH 100 CONTACTS

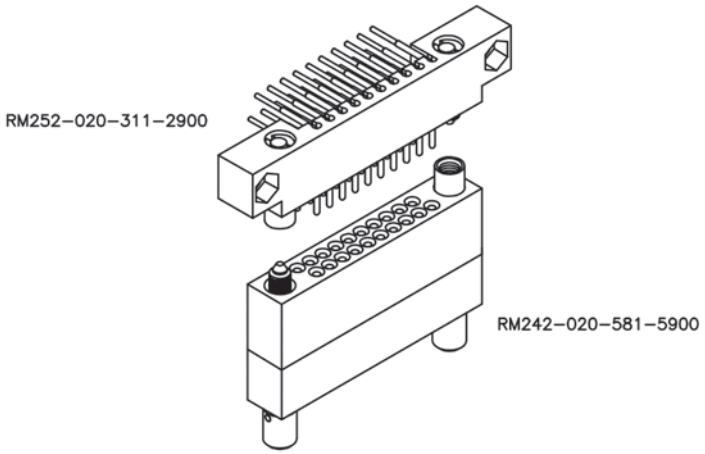

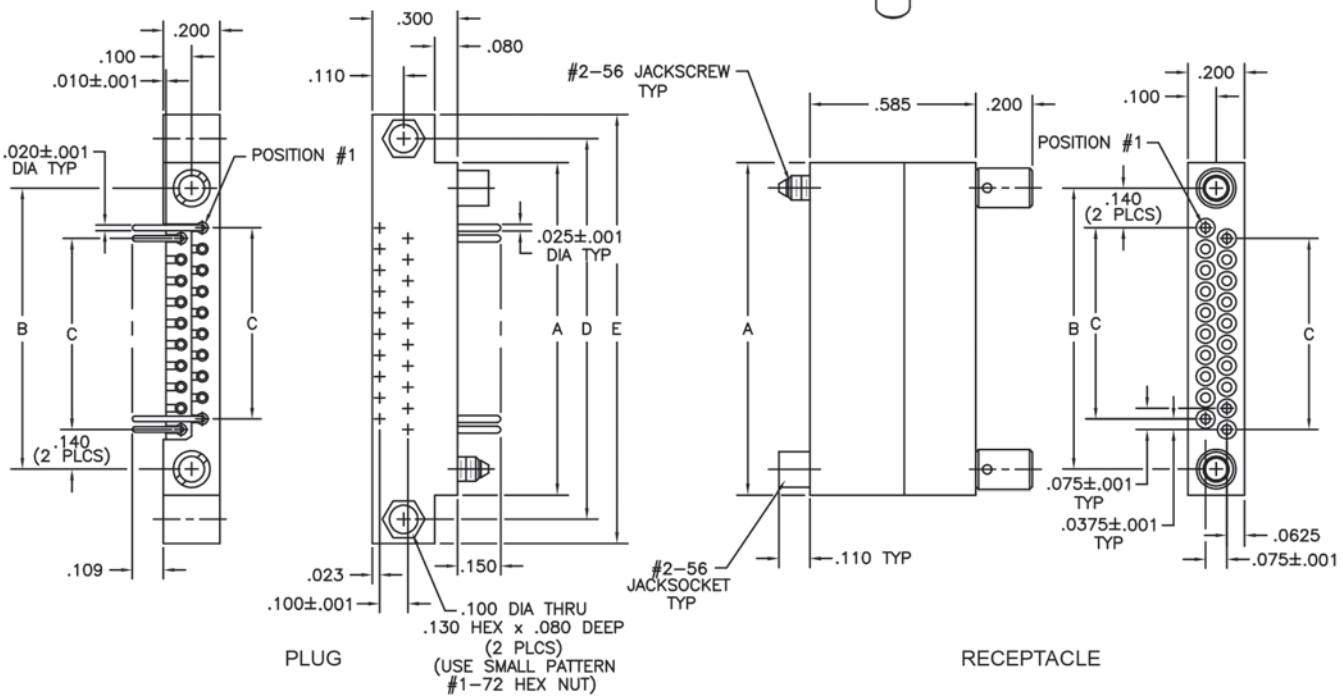

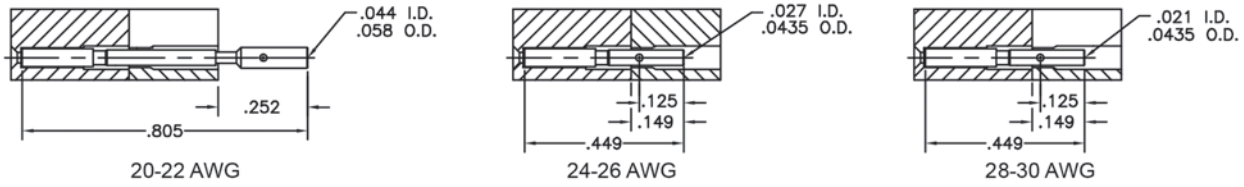

NOTE:
When using crimp contacts with 20 gage barrel, barrel must be cut off prior to removing contact from connector body.

CRIMP REMOVABLE CONTACTS	
SIZE	PART NUMBER
20–22 AWG	RM200–000–571–0000
24–26 AWG	RM200–000–581–0000
28–30 AWG	RM200–000–591–0000

DIMENSIONS					
SIZE	A	B	C	D	E
10	.797	.617	.300	.967	1.137
20	1.172	.992	.675	1.342	1.512
30	1.547	1.367	1.050	1.717	1.887
40	1.922	1.742	1.425	2.092	2.262
50	2.297	2.117	1.800	2.467	2.637
60	2.672	2.492	2.175	2.842	3.012
70	3.047	2.867	2.550	3.217	3.387
80	3.422	3.242	2.925	3.592	3.762
90	3.797	3.617	3.300	3.967	4.137
100	4.172	3.992	3.675	4.342	4.512