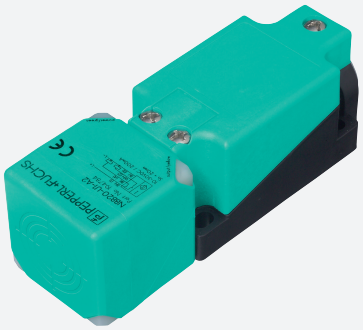

Inductive sensor

NBN40-U1-A2-M

- Sensor head bidirectional and rotatable
- 40 mm non-flush
- E1-Type approval
- Extended temperature range -40 ... +85 °C
- 4 LEDs indicator for 360° visibility

Dimensions

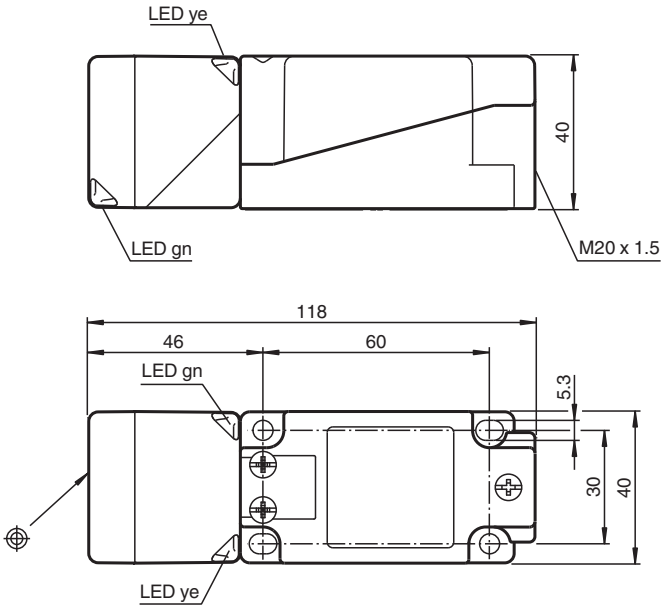

Technical Data

General specifications		
Switching function		complementary
Output type		PNP
Rated operating distance	s_n	40 mm
Installation		non-flush
Output polarity		DC
Assured operating distance	s_a	0 ... 32.4 mm
Actual operating distance	s_r	36 ... 44 mm
Reduction factor r_{Al}		0.34
Reduction factor r_{Cu}		0.3
Reduction factor r_{304}		0.81
Reduction factor r_{St37}		1
Reduction factor r_{Brass}		0.4

Release date: 2025-07-31 Date of issue: 2025-07-31 Filename: 207748_eng.pdf

Technical Data

Output type		4-wire
Nominal ratings		
Operating voltage	U_B	10 ... 60 V DC
Switching frequency	f	0 ... 150 Hz
Hysteresis	H	typ. 5 %
Reverse polarity protection		reverse polarity protected
Short-circuit protection		pulsing
Voltage drop	U_d	≤ 2 V
Operating current	I_L	0 ... 200 mA
Off-state current	I_r	0 ... 0.5 mA
No-load supply current	I_0	≤ 20 mA
Operating voltage indicator		LED, green
Switching state indicator		LED, yellow
Functional safety related parameters		
$MTTF_d$		680 a
Mission Time (T_M)		20 a
Diagnostic Coverage (DC)		0 %
Compliance with standards and directives		
Standard conformity		
Standards		EN IEC 60947-5-2
Approvals and certificates		
UL approval		cULus Listed Load Type: General Purpose Circuitry: Class 2 Power Source Enclosure Type Rating: Type 1 Supply/Switching Voltage: 60 V DC Output Switching Current: 200 mA
CCC approval		Certified by China Compulsory Certification (CCC)
E1 Type approval		10R-04
Ambient conditions		
Ambient temperature		-40 ... 85 °C (-40 ... 185 °F)
Mechanical specifications		
Connection type		screw terminals
Information for connection		A maximum of two conductors with the same core cross section may be mounted on one terminal connection! tightening torque 1.2 Nm + 10 %
Core cross section		up to 2.5 mm^2
Minimum core cross-section		without wire end ferrules 0.5 mm^2 , with connector sleeves 0.34 mm^2
Maximum core cross-section		without wire end ferrules 2.5 mm^2 , with connector sleeves 1.5 mm^2
Housing material		PA/metal with epoxy powder coating
Sensing face		PA-GF35
Housing base		plastic
Degree of protection		IP68 / IP69K
Mass		225 g
Dimensions		
Height		40 mm
Width		40 mm
Length		118 mm
Note		Tightening torque: 1.8 Nm (housing)

Release date: 2025-07-31 Date of issue: 2025-07-31 Filename: 207748_eng.pdf

Connection Assignment

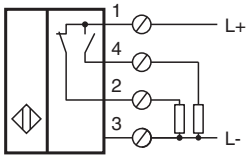

Mounting

Emitted interference and interference immunity in accordance with motor vehicle directive 2006/28/EG (e1 Type approval)
Interference immunity in accordance with DIN ISO 11452-2: 100 V/m
Frequency band 20 MHz up to 2 GHz

Mains-borne interference in accordance with ISO 7637-2: Pulse

Severity level	III	III	III	III	III	III	IV
Failure criterion	C	A	C	A	A	A	C

EN 61000-4-2:	CD: 8 kV /	AD: 15 kV
Severity level	IV	IV
EN 61000-4-3:	30 V/m (80...2500 MHz)	
Severity level	IV	
EN 61000-4-4:	2 kV	
Severity level	III	
EN 61000-4-6:	10 V (0.01...80 MHz)	
Severity level	III	
EN 55011:	Class A	

Release date: 2025-07-31 Date of issue: 2025-07-31 Filename: 207748_eng.pdf