ANATECH ELECTRONICS INC
RF & Microwave Filters & Products

24 MHz LC Lowpass Filter

Part Number: AE24L8750

ISO 9001 CERTIFIED

Electrical specifications

Cutoff Frequency (FC): 24 MHz
Passband: 0-24 MHz
Insertion loss over Passband: 1.3 dB Min
Return loss Over Passband: 14 dB Max
Rejection @ 25-100 MHz: 28 dB Max
Group Delay @3.78MHz: 245nsec Max

Mechanical

Mounting Method: SMA Bulkhead Jack Receptacle (Nickel)

Dimensions: 3.75 x 1 x 0.5 Inches

Environmental

Operating Temperature: -40 to +85° C
Storage Temperature: -55 to +95° C
Shock: 10 G. 11ms
Vibration: 10 G. 5 to 2000 Hz

Outline Drawing:

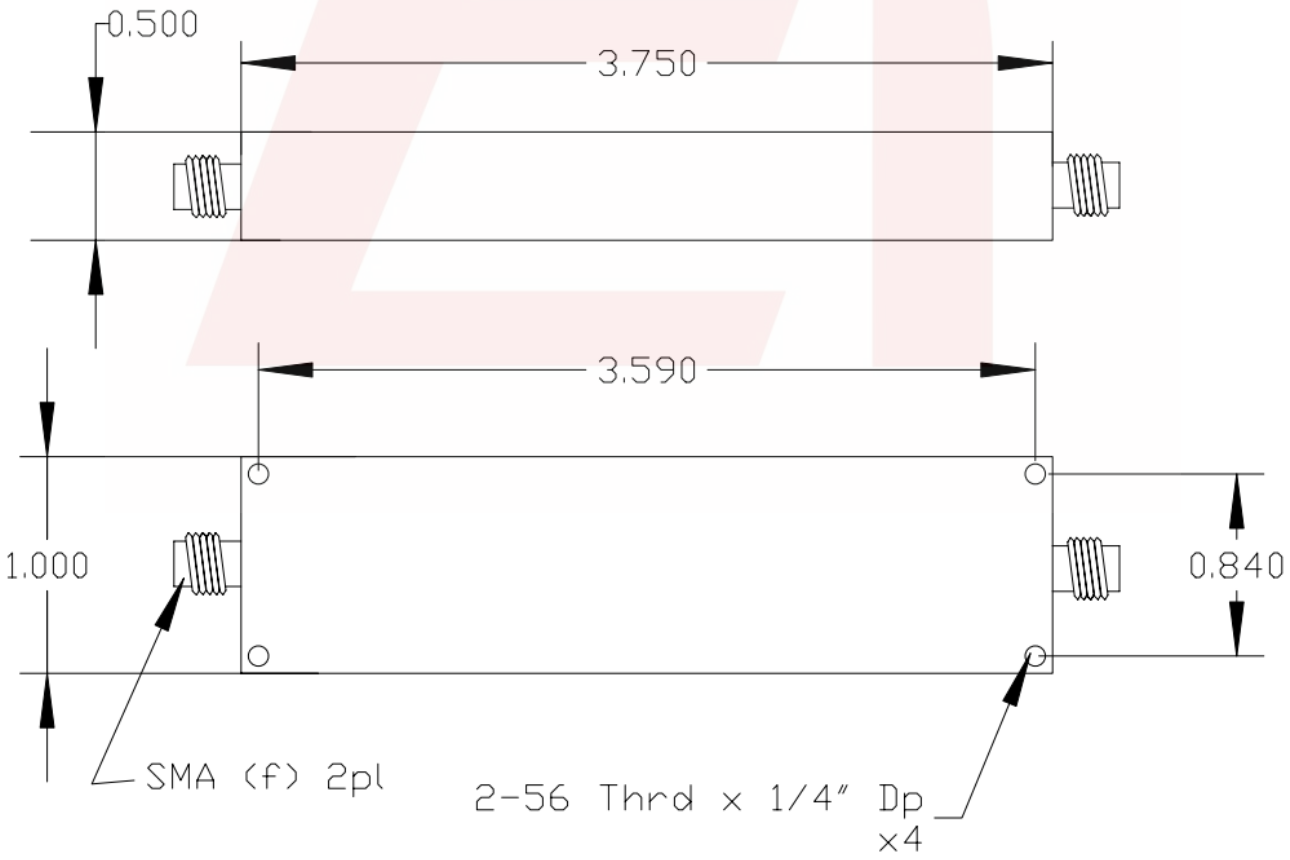

DS-L8750-02092015-Rev1

70 Outwater Lane Phone: (973) 772-4242
Garfield, NJ 07026 Fax : (973) 321-3941
Email: sales@anatechelectronics.com
Web: www.anatechelectronics.com