770147-1 ✔ ACTIVE

Commercial Pin and Socket Connectors

TE Internal #: 770147-1

Tin (Sn), Pin Contact, 24 – 18 AWG, 250 VAC / 600 VAC, .3 – .84 mm² Wire, Locking Lance Contact Retention, Crimp, Commercial Pin and Socket Connectors

View on TE.com >

Connectors > Contacts > Connector Contacts

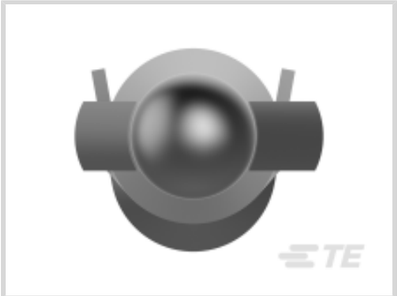

Contact Type: **Pin**

Contact Mating Area Plating Material: **Tin (Sn)**

Wire Contact Termination Area Plating Material: **Pre-Tin**

Operating Voltage: **250 VAC, 600 VAC**

Contact Retention Within Housing: **With**

Features

Product Type Features

Discrete Wire Type	Stranded

Electrical Characteristics

Operating Voltage	250 VAC, 600 VAC

Contact Features

Contact Type	Pin
Contact Mating Area Plating Material	Tin (Sn)
Wire Contact Termination Area Plating Material	Pre-Tin
Contact Retention Within Housing	With
Contact Base Material	Brass
Contact Current Rating (Max)	13 A
Mating Pin Diameter	2.36 mm[.093 in]
Wire Contact Termination Area Plating Thickness	.4 µm[15.74 µin]
Contact Orientation	Straight

Termination Features

Termination Method to Wire & Cable	Crimp
Product Terminates To	Wire & Cable

Mechanical Attachment

Contact Retention Type Within Housing	Locking Lance
Wire Insulation Support	Without

Dimensions

Wire Size	.3 – .84 mm²
Compatible Insulation Diameter Range	2.79 mm[.11 in]

Usage Conditions

Operating Temperature Range	-55 – 105 °C[-67 – 221 °F]

Operation/Application

Circuit Application	Power

Packaging Features

Packaging Quantity	1000
Packaging Method	Bag

Product Compliance

For compliance documentation, visit the product page on TE.com>

EU RoHS Directive 2011/65/EU	Compliant
EU ELV Directive 2000/53/EC	Compliant
China RoHS 2 Directive MIIT Order No 32, 2016	No Restricted Materials Above Threshold
EU REACH Regulation (EC) No. 1907/2006	Current ECHA Candidate List: JUNE 2025 (250) Candidate List Declared Against: JUNE 2025 (250) Does not contain REACH SVHC
Halogen Content	Low Halogen - Br, Cl, F < 900 ppm per homogenous material. Also BFR/CFR/PVC Free
Solder Process Capability	Not applicable for solder process capability

Product Compliance Disclaimer

This information is provided based on reasonable inquiry of our suppliers and represents our current actual knowledge based on the information they provided. This information is subject to change. The part numbers that TE has identified as EU RoHS compliant have a maximum concentration of 0.1% by weight in homogenous materials for lead, hexavalent chromium, mercury, PBB, PBDE, DBP, BBP, DEHP, DIBP, and 0.01% for cadmium, or qualify for an exemption to these limits as defined in the Annexes of Directive 2011/65/EU (RoHS2). Finished electrical and electronic equipment products

will be CE marked as required by Directive 2011/65/EU. Components may not be CE marked. Additionally, the part numbers that TE has identified as EU ELV compliant have a maximum concentration of 0.1% by weight in homogenous materials for lead, hexavalent chromium, and mercury, and 0.01% for cadmium, or qualify for an exemption to these limits as defined in the Annexes of Directive 2000/53/EC (ELV). Regarding the REACH Regulation, the information TE provides on SVHC in articles for this part number is based on the latest European Chemicals Agency (ECHA) 'Guidance on requirements for substances in articles' posted at this URL: https://echa.europa.eu/guidance-documents/guidance-on-reach

Compatible Parts

TE Part # 770360-1
06P .093 COMM P&S RECPT .250CL

TE Part # 770066-1
02P .093 COMM P&S RECPT .248CL

TE Part # 770095-1
09P .093 COMM P&S PLUG

TE Part # 770074-1
03P .093 COMM P&S PLUG HSG

TE Part # 770077-1
04P .093 COMM P&S PLUG HSG

TE Part # 770086-1
06P .093 COMM P&S RECPT HSG

TE Part # 770424-1
02P.093 COMM P&S RCPT .248CL

TE Part # 770329-1
04P .093 COMM P&S RECPT .250CL

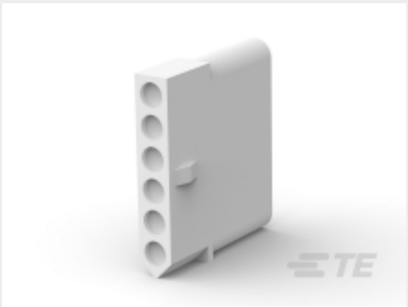

TE Part # 770782-1
06P .093 COMM P&S RECPT

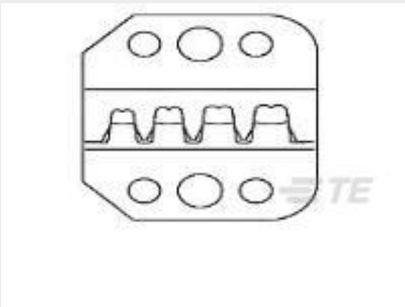

TE Part # 90872-2
PROCRMP DIE COMM .093 PIN/SOC

TE Part # 770068-1
02P .093 COMM P&S PLUG .248CL

TE Part # 770069-1
02P .093 COMM P&S PLUG .248CL

TE Part # 770099-1
12P .093 COMM P&S RECPT

TE Part # 770107-1
15P .093 COMM P&S PLUG

TE Part # 770812-1
06P .093 RCPT, COMPNT HOOK-UP

TE Part # 770361-1
06P .093 COMM P&S PLUG .250CL

TE Part # 770063-1
01P .093 COMM P&S RECPT HSG

TE Part # 770090-1
06P .093 COMM P&S PLUG HSG

TE Part # 770330-1
04P .093 COMM P&S PLUG .250CL

TE Part # 770078-1
04P .093 COMM P&S PLUG HSG

Also in the Series | Commercial Pin and Socket Connectors

Connector Contacts(41)

Insertion & Extraction Tools(3)

Power Contacts(39)

Rectangular Connector Housings(94)

Rectangular Power Connectors(94)

Standard Circular Connectors(1)

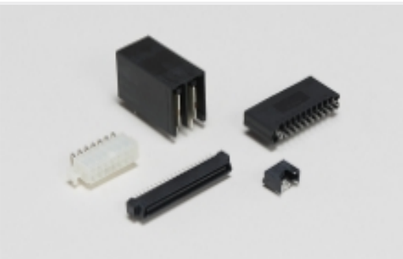

Standard Rectangular Connectors(94)

Customers Also Bought

TE Part #T41511C9L25-005
RPC-M12L-5MS-5.0-PUR 16AWG GY

TE Part #813584-SF
IL19-UK1-H05-3150-200

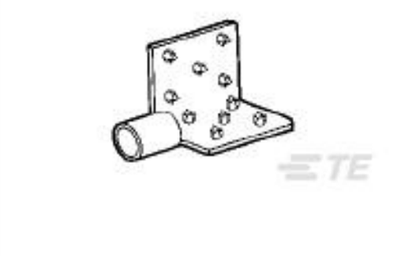

TE Part #329860-1
TERMI-FOIL 16-14 DOUBLE FACE

TE Part #3-644460-5
05P MTA156 CONN ASSY 18AWG ORA

TE Part #770063-1
01P .093 COMM P&S RECPT HSG

TE Part #770070-1
03P .093 COMM P&S RECPT HSG

TE Part #770266-1
02P .093 COMM P&S RECPT .248CL

TE Part #1318111-1
DYNAMIC D-2 TAB CONT M L/P

TE Part #1-1318115-3
DYNAMIC D-2100 TAB HSG 6P F/H

TE Part #838171-E
IDCCS SMC 1,27 26 * AU AUI 250 PVC

Documents

Product Drawings

.093 CP&S PIN PTPBR LP 24-18

English

CAD Files

3D PDF

English

Customer View Model

ENG_CVM_770147-1_D.2d_dxf.zip

English

Customer View Model

ENG_CVM_770147-1_D.3d_igs.zip

English

Customer View Model

ENG_CVM_770147-1_D.3d_stp.zip

English

3D PDF

3D

Customer View Model

ENG_CVM_CVM_770147-1_C.2d_dxf.zip

English

Customer View Model

ENG_CVM_CVM_770147-1_C.3d_igs.zip

English

Customer View Model

ENG_CVM_CVM_770147-1_C.3d_stp.zip

English

By downloading the CAD file I accept and agree to the Terms and Conditions of use.

Datasheets & Catalog Pages

SOFT_SHELL_PIN_SOCKET_CONNECTORS_STANDARD_DENSITY

English

Product Specifications

Application Specification

English