EMD-SL-3V-400 - Monitoring relay

2866051

https://www.phoenixcontact.com/us/products/2866051

Please be informed that the data shown in this PDF document is generated from our online catalog. Please find the complete data in the user documentation. Our general terms of use for downloads are valid.



Monitoring relay for monitoring 3-phase voltages of 280…520 V AC, window, without neutral conductor connection, supply voltage can be selected via power module, 1 changeover contact

Product description

Increasingly higher demands are being placed on safety and system availability - across all sectors. Processes are becoming more and more complex, not only in mechanical engineering and the chemical industry, but also in plant and automation technology. Demands on power engineering are also increasing constantly.
Error-free and therefore cost-effective operation can only be achieved through continuous monitoring of important network and system parameters. Electronic monitoring relays in the EMD series are available for a wide range of monitoring tasks to avoid the consequences of errors or to keep them within limits.
The operating states are indicated using colored LEDs, errors that may occur can be sent to a control system via a floating contact or can shut down a part of the system. Some device versions are equipped with startup and response delays in order to briefly tolerate measured values outside the set monitoring range.

Your advantages

- Adjustable response delay
- Variable supply voltage range
- Adjustable via potentiometer on the front
- Adjustable asymmetry

Commercial data

Item number	2866051
Packing unit	1 pc
Minimum order quantity	1 pc
Sales key	C440
Product key	DK6631
GTIN	4017918952655
Weight per piece (including packing)	134 g
Weight per piece (excluding packing)	133.1 g
Customs tariff number	85364900
Country of origin	AT

Technical data

Product properties

Product type	Voltage monitoring relay
Operating mode	100% operating factor
Mechanical service life	approx. 2x 10^7 cycles

Insulation characteristics

Insulation	Basic insulation
Overvoltage category	III
Pollution degree	2

Electrical properties

Service life electrical	2x 10^5 cycles at ohmic load, 1000 VA
Mains type	3-phase
Rated insulation voltage	300 V
Rated surge voltage	4 kV

Supply

Supply voltage range	24 V AC ... 230 V AC (see Power modules)
	24 V DC (see Power modules)
Nominal power consumption	2 VA (1.5 W)

Input data

Input name	Measuring input
Measured value	AC sine (48 Hz ... 63 Hz)
Nominal input voltage U_N	3 ~ 400 V
Maximum input voltage	3 ~ 600 V
Input resistance of voltage input	1 MΩ
Frequency range	50 Hz ... 60 Hz
Maximum temperature coefficient	< 0.1 %/K
Setting range for response delay	0.2 s ... 10 s
Min. setting range	-30 % ... 20 % (From U_N)
Max. setting range	-20 % ... 30 % (From U_N)
Min setting range of the voltage threshold value	280 V AC ... 480 V AC
Max. setting range of the voltage threshold value	320 V AC ... 520 V AC
Function	Window, without neutral conductor connection
Basic accuracy	± 5 % (of scale end value)
Setting accuracy	≤ 5 % (of scale end value)
Repeat accuracy	≤ 2 %
Voltage influence	≤ 0.5 %
Recovery time	500 ms

Output data

Switching

Contact switching type	1 floating changeover contact
Maximum switching voltage	250 V AC (in acc. with IEC 60664-1)
Interrupting rating (ohmic load) max.	750 VA (3 A/250 V AC, module aligned, ≤ 5 mm spacing)
	1250 VA (5 A/250 V AC, module not aligned, ≥ 5 mm spacing)
Output fuse	5 A (fast-blow)

Connection data

Connection method	Screw connection
Stripping length	8 mm
Conductor cross-section rigid	0.5 mm² ... 2.5 mm²
Conductor cross-section flexible	0.25 mm² ... 2.5 mm²
Conductor cross-section AWG	20 ... 14

Dimensions

Width	22.5 mm
Height	90 mm
Depth	113 mm

Material specifications

Color	green (RAL 6021)
Housing insulation material	Polyamide PA, self-extinguishing

Environmental and real-life conditions

Ambient conditions

Degree of protection (Housing)	IP40 (Housing)
Degree of protection (Connection terminal blocks)	IP20 (Connection terminal blocks)
Ambient temperature (operation)	-25 °C ... 55 °C
	-25 °C ... 40 °C (corresponds to UL 508)
Ambient temperature (storage/transport)	-25 °C ... 70 °C
Climatic class	3K3 (in acc. with EN 60721)
Permissible humidity (operation)	15 % ... 85 %

Approvals

CE

Certificate	CE-compliant

UL, USA/Canada

Identification	UL/C-UL Listed UL 508

EMC data

Electromagnetic compatibility	Conformance with EMC directive
Low Voltage Directive	Conformance with Low Voltage Directive
Noise immunity	EN 61000-6-2

Noise emission

Standards/regulations	EN 61000-6-3

Standards and regulations

Standards/regulations	EN 50178

Mounting

Mounting type	DIN rail mounting
Assembly note	on standard DIN rail NS 35 in accordance with EN 60715
Mounting position	any

Drawings

Block diagram

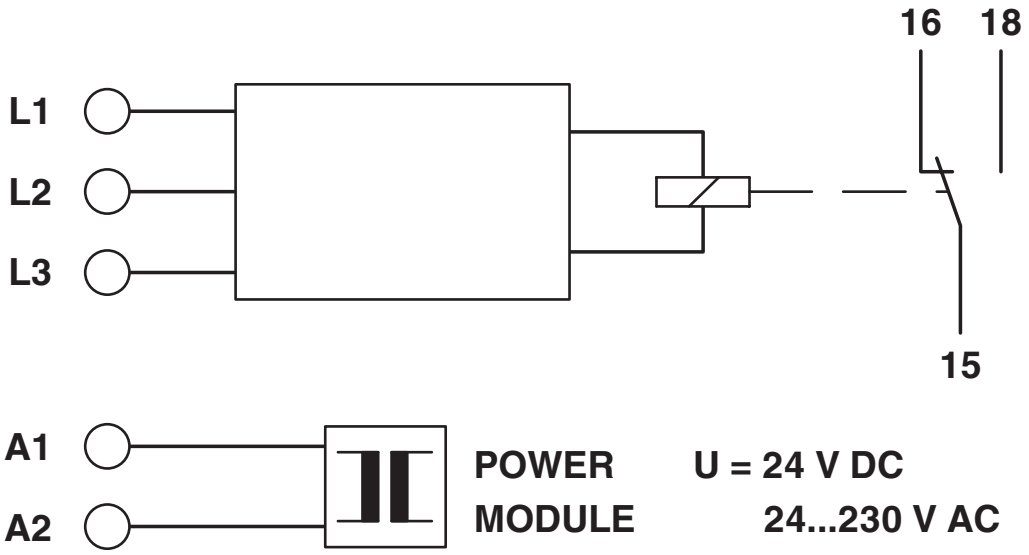

Approvals

To download certificates, visit the product detail page: https://www.phoenixcontact.com/us/products/2866051

EAC
Approval ID: RU*C-DE.*08.B.00010

UL Listed
Approval ID: FILE E 172140

cUL Listed
Approval ID: FILE E 172140

Classifications

ECLASS

ECLASS-13.0	27371801
ECLASS-15.0	27371801

ETIM

ETIM 9.0	EC001438

UNSPSC

UNSPSC 21.0	41113600

Environmental product compliance

EU RoHS

Fulfills EU RoHS substance requirements	Yes, No exemptions

China RoHS

Environment friendly use period (EFUP)	EFUP-E
	No hazardous substances above the limits

EU REACH SVHC

REACH candidate substance (CAS No.)	No substance above 0.1 wt%

Phoenix Contact 2025 © - all rights reserved
https://www.phoenixcontact.com

Phoenix Contact USA
586 Fulling Mill Road
Middletown, PA 17057, United States
(+717) 944-1300
info@phoenixcon.com