Data sheet

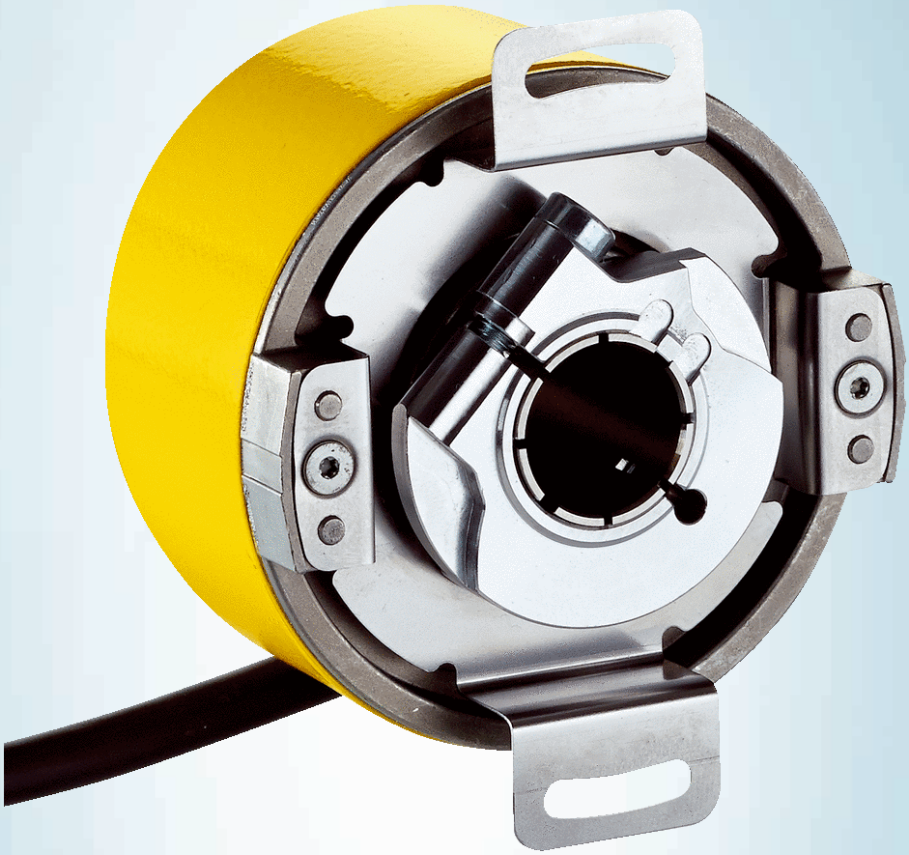

DFS60S-TDOL01024

DFS60S Pro

SAFETY ENCODERS

SICK
Sensor Intelligence.



Illustration may differ

Ordering information

Type	part no.
DFS60S-TD0L01024	1069884

Other models and accessories → www.sick.com/DFS60S_Pro

Detailed technical data

Safety-related parameters

Safety integrity level	SIL 2 (IEC 61508), SILCL2 (IEC 62061) [1]
Performance level	PL d (EN ISO 13849) [1]
Category	3 (EN ISO 13849)
PFH (mean probability of a dangerous failure per hour)	1.7×10^{-8} [2]
T_M (mission time)	20 years (EN ISO 13849)
Safety-related measuring step	0.09°, Quadrature analysis
Safety-related accuracy	± 0.09°

[1] For more detailed information on the exact configuration of your machine/unit, please consult your relevant SICK branch office.
[2] The stated values apply to a diagnostic coverage of 99%, which must be achieved by the external drive system, and an operating temperature of 95 °C.

Performance

Sine/cosine periods per revolution	1,024
Measuring step	0.3 ″, For interpolation of the sine/cosine signals with e.g. 12 bit [1]
Integral non-linearity	Typ. ± 45 ″ (without mechanical tension of the stator coupling)
Differential non-linearity	± 7 ″

[1] Not safety-related.

Interfaces

Communication interface	Incremental
Communication Interface detail	Sin/Cos [1]
Number of signal channels	6-channel
Initialization time	50 ms [2]
Output frequency	≤ 153.6 kHz

[1] 1.0 V_{SS} (differential).
[2] Valid signals can be read once this time has elapsed.

Power consumption	≤ 0.7 W (without load)
Load resistance	≥ 120 Ω

[1] 1.0 V_{SS} (differential).

[2] Valid signals can be read once this time has elapsed.

Electronics

Connection type	Cable, 8-wire, universal, 3 m [1]
Supply voltage	4.5 ... 32 V
Reference signal, number	1
Reference signal, position	90°, electronically, gated with Sinus and Cosinus
Reverse polarity protection	✓
Protection class	III (according to DIN EN 61140)
Short-circuit protection of the outputs	✓ [2]

[1] The universal cable connection is positioned so that it can be laid in a radial or axial direction without any kinks. UL approval not available.

[2] Short-circuit to another channel or GND permitted for max. 30 s. In the case of U_S ≤ 12 V additional short-circuit to U_S permitted for max. 30 s.

Mechanics

Mechanical design	Through hollow shaft
Shaft diameter	10 mmWith feather key groove
Weight	Approx. 0.25 kg [1]
Shaft material	Stainless steel
Flange material	Die-cast zinc
Housing material	Aluminum die cast
Start up torque	≤ 0.8 Ncm (+20 °C)
Operating torque	≤ 0.6 Ncm (+20 °C)
Permissible movement static	± 0.3 mm (radial) ± 0.5 mm (axial)
Permissible movement dynamic	± 0.05 mm (radial) ± 0.1 mm (axial)
Operating speed	≤ 6,000 min^{-1} [2]
Moment of inertia of the rotor	56 gcm^2
Bearing lifetime	3.6 x 10^9 revolutions [3]
Angular acceleration	≤ 500,000 rad/s^2

[1] Based on encoder with male connector.

[2] Allow for self-heating of approx. 3.0 K per 1,000 rpm regarding the permissible operating temperature.

[3] On maximum operating speed and temperature.

Ambient data

EMC	According to EN 61000-6-2, EN 61000-6-3 and IEC 61326-3-1
Enclosure rating	IP65 (IEC 60529) [1]
Permissible relative humidity	90 % (Condensation not permitted)

[1] With plug and mating plug fitted minimum IP65.

[2] Allow for self-heating of approx. 3.0 K per 1,000 rpm regarding the permissible operating temperature.

[3] Checked to operation with vector length monitoring.

Operating temperature range	–30 °C ... +85 °C [2]
Storage temperature range	–30 °C ... +85 °C, without package
Resistance to shocks	100 g, 6 ms (EN 60068-2-27) [3]
Resistance to vibration	30 g, 10 Hz ... 1,000 Hz (EN 60068-2-6)

[1] With plug and mating plug fitted minimum IP65.
[2] Allow for self-heating of approx. 3.0 K per 1,000 rpm regarding the permissible operating temperature.
[3] Checked to operation with vector length monitoring.

Certificates

EU declaration of conformity	✓
UK declaration of conformity	✓
ACMA declaration of conformity	✓
Moroccan declaration of conformity	✓
China-RoHS	✓
EC-Type-Examination approval	✓
Information according to Art. 3 of Data Act (Regulation EU 2023/2854)	✓

Classifications

ECLASS 5.0	27270501
ECLASS 5.1.4	27270501
ECLASS 6.0	27270590
ECLASS 6.2	27270590
ECLASS 7.0	27270501
ECLASS 8.0	27270501
ECLASS 8.1	27270501
ECLASS 9.0	27270501
ECLASS 10.0	27270501
ECLASS 11.0	27270501
ECLASS 12.0	27270501
ETIM 5.0	EC001486
ETIM 6.0	EC001486
ETIM 7.0	EC001486
ETIM 8.0	EC001486
UNSPSC 16.0901	41112113

Dimensional drawing Through hollow shaft, cable

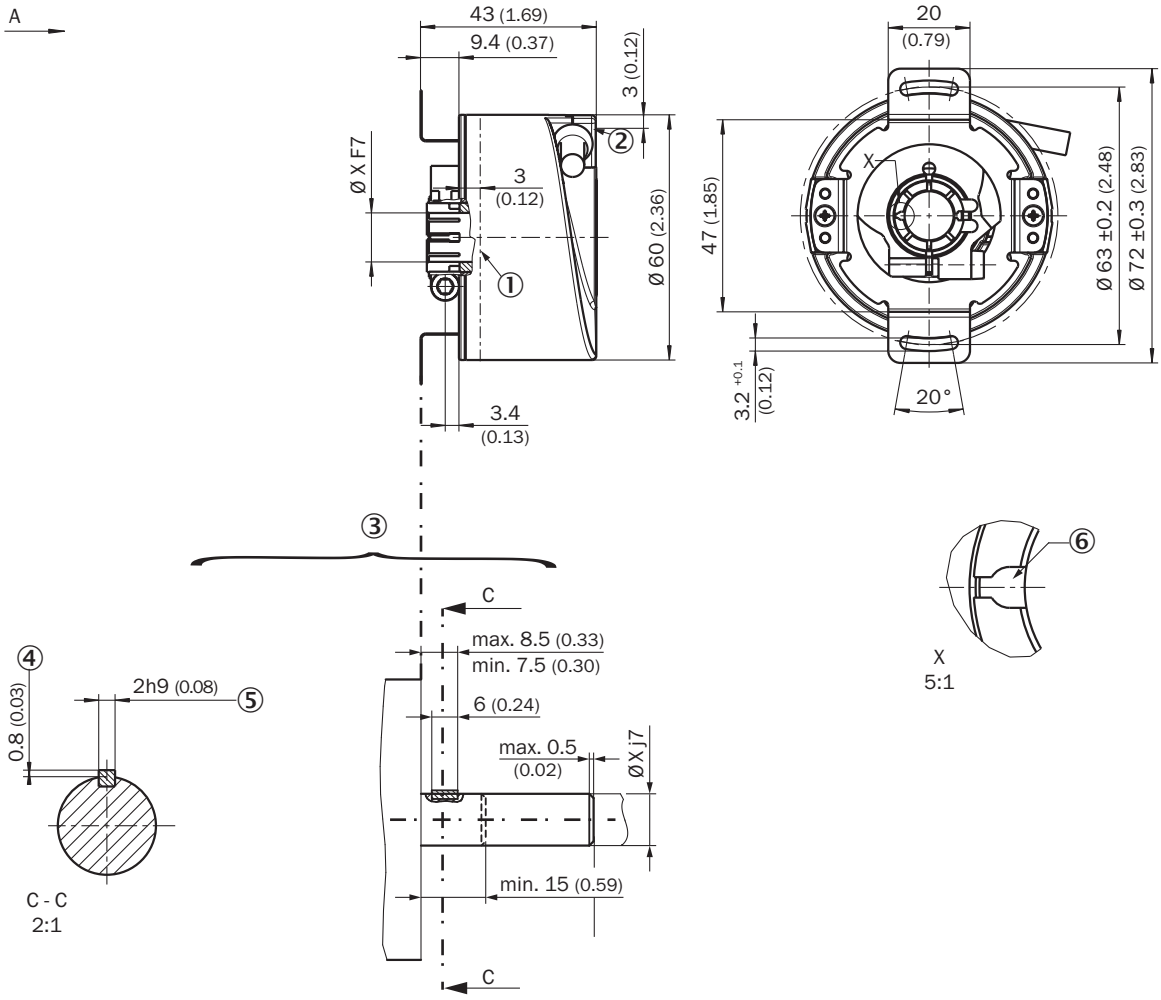

Dimensions in mm (inch)
① operating temperature measuring point (freely selectable, around the housing surface area in each case, approx. 3 mm away from flange)
② measuring point vibration (respectively at the housing face. approx. 3 mm away from the cover edge)
③ Attachment specifications
④ max. 0.4 at Ø 5/8"
⑤ feather key DIN 6885-A 2x2x6
⑥ feather key groove

Shaft diameter XF7	Shaft diameter xj7
6 mm	Provided by customer
8 mm	
3/8″	
10 mm	
12 mm	
1/2″	
14 mm	
15 mm	
5/8″	

PIN assignment

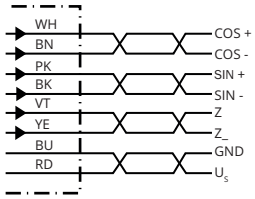

SICK AT A GLANCE

SICK is one of the leading manufacturers of intelligent sensors and sensor solutions for industrial applications. A unique range of products and services creates the perfect basis for controlling processes securely and efficiently, protecting individuals from accidents and preventing damage to the environment.

We have extensive experience in a wide range of industries and understand their processes and requirements. With intelligent sensors, we can deliver exactly what our customers need. In application centers in Europe, Asia and North America, system solutions are tested and optimized in accordance with customer specifications. All this makes us a reliable supplier and development partner.

Comprehensive services complete our offering: SICK LifeTime Services provide support throughout the machine life cycle and ensure safety and productivity.

For us, that is “Sensor Intelligence.”

WORLDWIDE PRESENCE:

Contacts and other locations –www.sick.com