Hirose Active Optical Connector
BF4MC Series Design Note

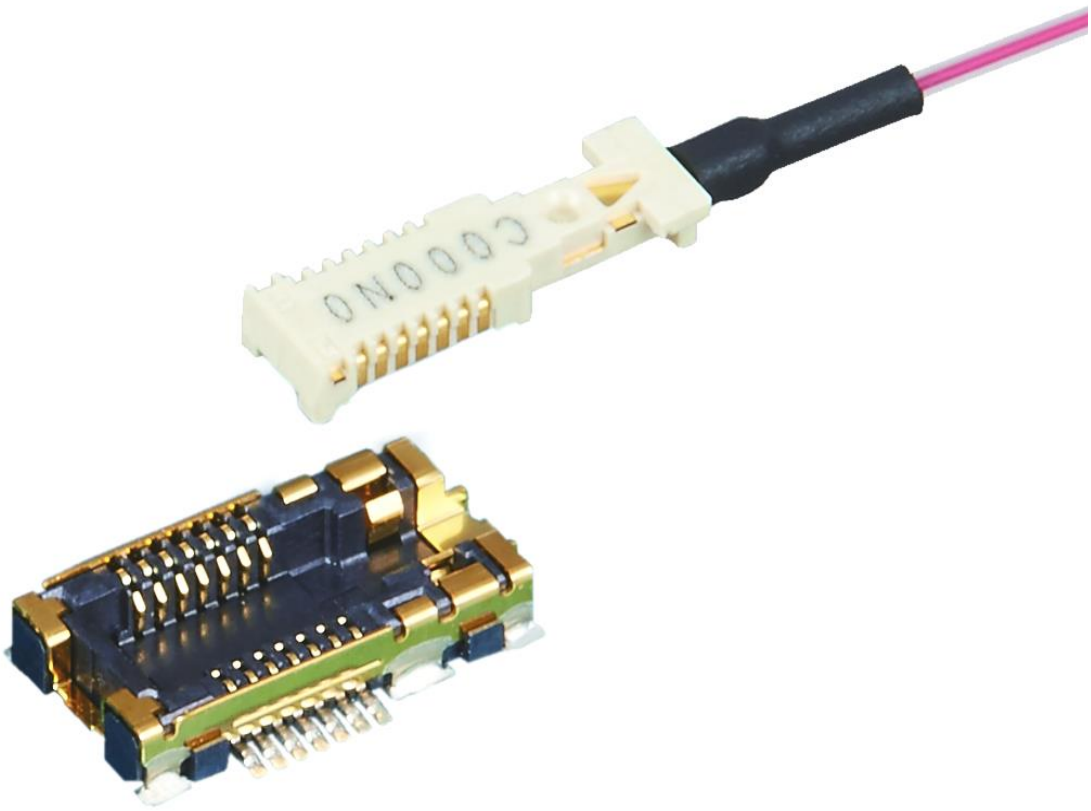

May.1.2024 Copyright 2024 HIROSE ELECTRIC CO., LTD. All Rights Reserved.

— Table of Contents —

1. Introduction 3
1.1. BF4MC Series 3
1.2. Product Features 3
1.3. Application 3
2. Product Information 4
2.1. Product Materials 4
2.2. Product Number 5
2.3. Product Appearance and HRS No. 6
2.4. Recommended PCB layout and Reflow Temperature Profile 9
2.5. Packaging Specifications 10
2.6. Block Diagram 11
2.7. Pin Assignment 11
2.8. Pin Functions 12
2.9. Typical Layout 13
3. Operating Characteristics 15
3.1. Absolute Maximum Ratings 15
3.2. Recommended Operating Conditions 15
3.3. DC Characteristics 16
3.4. AC Characteristics 16
4. Functional Description 17
4.1. Transition Time for Sleep mode ⇔ Operation mode 17
4.2. Signal Detection Time 17
4.3. Termination 18
4.4. DC Balance 18
4.5. LVDS Connection 18
5. Typical Characteristics 19
5.1. Eye Diagram 19
5.2. Characteristics variation in fiber length 20
5.3. Temperature Characteristics 21
6. Precautions 22
6.1. Optical Fiber Handling 22
6.2. Countermeasures Against Static Electricity 22
6.3. Connector Mating Method 23
6.4. Connector Unmating Method 24
6.5. Fail-safe design 25
6.6. Notes on handling of the product 26
6.7. Notes on use of the product 27
7. Revision History 28

May.1.2024 Copyright 2024 HIROSE ELECTRIC CO., LTD. All Rights Reserved.

1. Introduction

1.1. BF4MC Series

Hirose developed the micro "BF4MC connector" that enables optical transmission of data between boards that are incorporated in devices.
It converts an electrical signal that is received from a board by using the semiconductor component built-in the connector, and transfers the data via optical fiber.
BF4MC connector is a revolutionary design that enables easy use of electromagnetic noise-free, insulated, long-distance, high-speed transmission. These are the merits of the optical transmission, mounted inside devices achieving dramatic downsizing and lower power consumption when compared to existing optical products.
It can be used in a wide range of applications from industrial devices to mobile phones.

1.2. Product Features

- Supporting high speed transmission up to 6.25 Gbps using optical fiber
- Enabling simplex communication with signal fiber
- VCSEL and VCSEL drivers are mounted in the TX plug
- PD and TIA+LA are mounted in the RX plug
- Low power consumption (during operation at room temperature)
  80 mW or less (when running on a dual power supply)
  120 mW or less (when running on a single power supply)
- Supporting SLVS-200 interface (LVDS tolerant)
- Supporting the flexible fiber (GI80/50)
- Power supply Mode

Transmitter (TX)	+2.5 V or +3.3 V
Receiver (RX)	+2.5 V and +1.5 V [with a dual power supply mode enabled] (**Note 1**)
	+3.3 V [with a single power supply mode enabled] (**Note 2**)

- Mis-insertion prevention structure

Note 1: Dual power supply mode	Driving method that enables to reduce the power consumption by using two types of drive voltage
Note 2: Single power supply mode	Driving method that uses only a single drive voltage

1.3. Application

- Data transmission based on E/O and O/E conversion
- SLVS-200 Interface
- FPGA application

May.1.2024 Copyright 2024 HIROSE ELECTRIC CO., LTD. All Rights Reserved.

2. Product Information

2.1. Product Materials

Plug harness, Receptacle also meet RoHS compliant.

Table 2.1 (A) Materials of the plug harnesses

Port		*Details*
Transmitter plug (TX)	Housing	LCP(White)
	Contact	Phosphor bronze(Au plating)
	Plate	Phosphor bronze(Ni plating)
	VCSEL	GaAs
	VCSEL driver	Si(CMOS)
	Bonding wire	Au
	Sealing resin	Epoxy resin
	Heat shrink tubing	Polyolefin(Black)
Receiver plug (RX)	Housing	LCP(White)
	Contact	Phosphor bronze(Au plating)
	Plate	Phosphor bronze(Ni plating)
	PD	GaAs
	TIA/LA	Si(CMOS)
	Bonding wire	Au
	Sealing resin	Epoxy resin
	Heat shrink tubing	Polyolefin(Black)
Optical fiber	Fiber	Silica glass(GI50/80)
	Coating	UV curable resin/Thermoplastic resin(Φ 0.5)

*The coating of the optical fiber contains Dibutyltin compounds (DBT) that are intentionally added as catalyst in an amount less than the amount specified in REACH Regulation (1,000 ppm in terms of tin).

Table 2.1 (B) Materials of the receptacles

Port		*Details*
Transmitter Receptacle(TX) and Receiver Receptacle(RX)	Housing	LCP(Black)
	Contact	Phosphor bronze(Au plating)
	shell	Phosphor bronze(Au plating)

May.1.2024 Copyright 2024 HIROSE ELECTRIC CO., LTD. All Rights Reserved.

2.2. Product Number

Refer to the product number to determine the product specifications.

■ **Plug harness**

BF4M C-6G TX RX - B1 - 75MM
① ② ③ ④ ⑤ ⑥

Table 2.2 (A) Plug harness

①	Series
②	Identification of Bit rate 6G : 0.05 to 6.25 Gbps
③④	Type of plug that attaches to both ends of the harness TX : BF4 Transmitter plug RX : BF4 Receiver plug
⑤	Type of fiber cable B1 : Outline Φ 0.5, Red B2 : Outline Φ 0.5, Bule
⑥	Identification of the length of the fiber cable ※Cable length less than 1m ⇒ The end of the product name・**MM (Millimeter) ※Cable length 1m or more ⇒ The end of the product name・**M (Meter)

■ **Receptacle**

BF4 - TX - 14 DS - 0.5 V (01)
① ② ③ ④ ⑤ ⑥ ⑦

Table 2.2 (B) Receptacle

①	Series
②	Identification of the Transmitter and Receiver TX : Transmitter RX : Receiver
③	Number of Electrical terminal pin 14 Pin
④	Identification of Socket shape Socket(S) of Double line assignment pins(D)
⑤	Identification of the electric terminal pitch 0.5 mm
⑥	Identification of the mating method V : Vertical mated to the mounting surface
⑦	Packing Specifications None : 500 Pieces /1 Reel (01) : 1000 Pieces /1 Reel (02) : 2000 Pieces /1 Reel (10) : 10 Pieces /1 Pack (11) : 100 Pieces /1 Reel

May.1.2024 Copyright 2024 HIROSE ELECTRIC CO., LTD. All Rights Reserved.

2.3. Product Appearance and HRS No.

■ **Plug harness:**

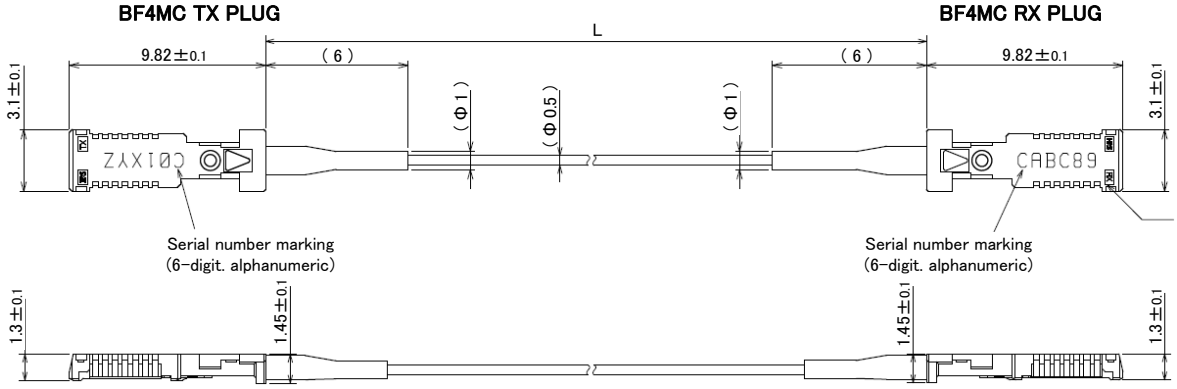

Figure 2.3 (A) Appearance of the plug harness

Table 2.3 (A) Product information of the plug harness

HRS No.	Product Number	Fiber species	Cable length L
831-1102-0 00	BF4MC-6GTXRX-B1-75MM	Φ 0.5 Red	75 mm
831-1102-0 04	BF4MC-6GTXRX-B1-45MM	Φ 0.5 Red	45 mm
831-1102-0 05	BF4MC-6GTXRX-B1-50MM	Φ 0.5 Red	50 mm
831-1102-0 06	BF4MC-6GTXRX-B1-55MM	Φ 0.5 Red	55 mm
831-1102-0 07	BF4MC-6GTXRX-B1-60MM	Φ 0.5 Red	60 mm
831-1102-0 08	BF4MC-6GTXRX-B1-65MM	Φ 0.5 Red	65 mm
831-1102-0 09	BF4MC-6GTXRX-B1-70MM	Φ 0.5 Red	70 mm
831-1102-0 11	BF4MC-6GTXRX-B1-80MM	Φ 0.5 Red	80 mm
831-1102-0 12	BF4MC-6GTXRX-B1-85MM	Φ 0.5 Red	85 mm
831-1102-0 13	BF4MC-6GTXRX-B1-90MM	Φ 0.5 Red	90 mm
831-1102-0 14	BF4MC-6GTXRX-B1-95MM	Φ 0.5 Red	95 mm
831-1102-0 15	BF4MC-6GTXRX-B1-100MM	Φ 0.5 Red	100 mm
831-1109-9 00	BF4MC-6GTXRX-B1-1M	Φ 0.5 Red	1 m
831-1109-9 01	BF4MC-6GTXRX-B1-2M	Φ 0.5 Red	2 m
831-1109-9 02	BF4MC-6GTXRX-B1-3M	Φ 0.5 Red	3 m
831-1109-9 03	BF4MC-6GTXRX-B1-4M	Φ 0.5 Red	4 m
831-1109-9 04	BF4MC-6GTXRX-B1-5M	Φ 0.5 Red	5 m
831-1109-9 09	BF4MC-6GTXRX-B1-10M	Φ 0.5 Red	10 m

Length (L) of the harness

・The shortest harness length is 45 mm, and the harness up to 100 mm in length is available in 5 mm increments.
(45 mm, 50 mm, 55 mm …, 100 mm)

・Harness longer than those listed above is also available upon request. Please inform us of your desired harness length.

・Blue Fiber color is also available. Contact your sales representative for details.

May.1.2024 Copyright 2024 HIROSE ELECTRIC CO., LTD. All Rights Reserved.

■ Receptacle: Transmitter (TX)

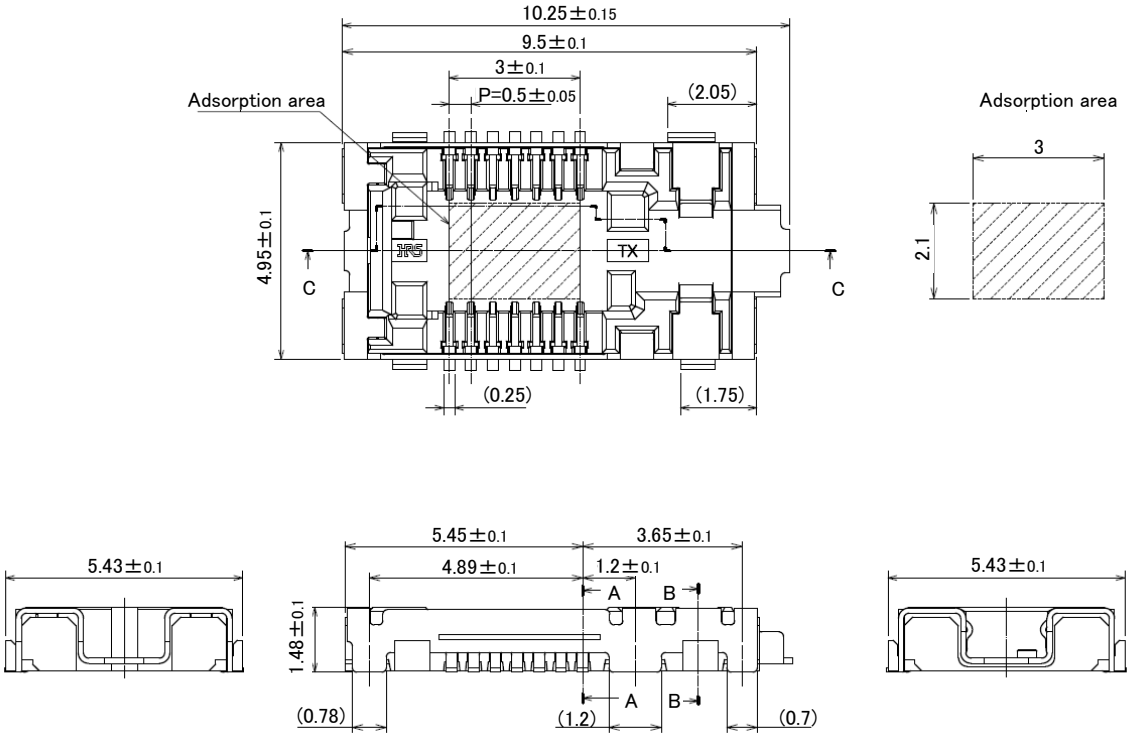

Figure 2.3 (B) Appearance of the TX Receptacle

Table 2.3 (B) Receptacle: Transmitter (TX)

HRS No.	Product Name	Packing specifications
831-0008-6 00	BF4-TX-14DS-0.5V	1 Reel / 500 Pieces
831-0008-6 01	BF4-TX-14DS-0.5V(01)	1 Reel / 1000 Pieces
831-0008-6 02	BF4-TX-14DS-0.5V(02)	1 Reel / 2000 Pieces
831-0008-6 10	BF4-TX-14DS-0.5V(10)	1 Pack / 10 Pieces
831-0008-6 11	BF4-TX-14DS-0.5V(11)	1 Reel / 100 Pieces

・The structure is designed so that the receiver (RX) plug does not mate.

May.1.2024 Copyright 2024 HIROSE ELECTRIC CO., LTD. All Rights Reserved.

■ **Receptacle: Receiver (RX)**

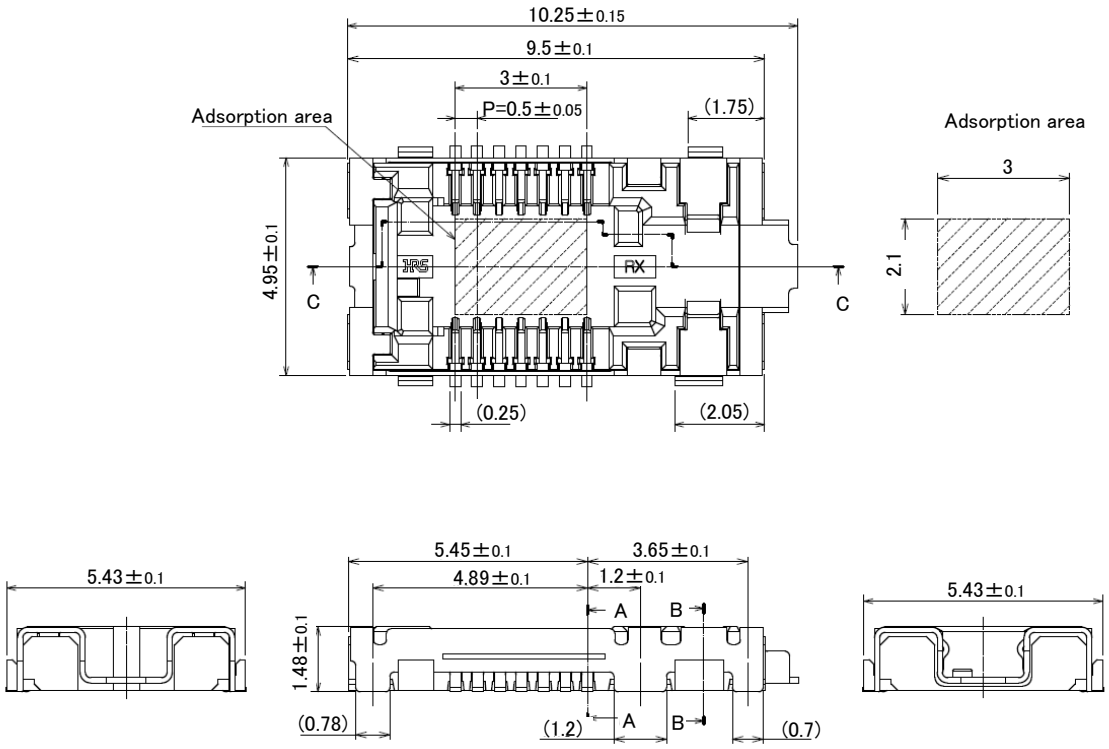

Figure 2.3 (C) Appearance of the RX receptacle

Table 2.3 (C) Receptacle: Receiver (RX)

HRS No.	Product Name	Packing specifications
831-0008-9 00	BF4-RX-14DS-0.5V	1 Reel / 500 Pieces
831-0008-9 01	BF4-RX-14DS-0.5V(01)	1 Reel / 1000 Pieces
831-0008-9 02	BF4-RX-14DS-0.5V(02)	1 Reel / 2000 Pieces
831-0008-9 10	BF4-RX-14DS-0.5V(10)	1 Pack / 10 Pieces
831-0008-9 11	BF4-RX-14DS-0.5V(11)	1 Reel / 100 Pieces

・The structure is designed so that the transmitter (TX) plug does not mate.

May.1.2024 Copyright 2024 HIROSE ELECTRIC CO., LTD. All Rights Reserved.

2.4. Recommended PCB layout and Reflow Temperature Profile

■ Recommended layout. (TX/RX receptacles) (**Note 3**)

Recommended PCB land pattern dimensions

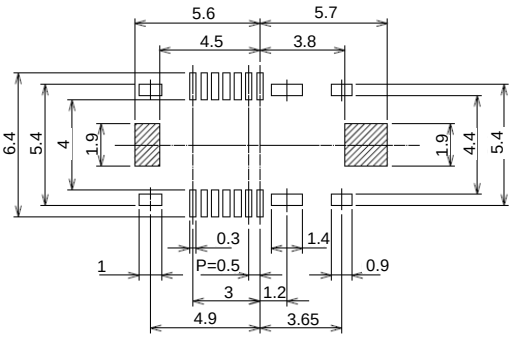

Recommended metal mask dimensions
(mask thickness 120 μm)

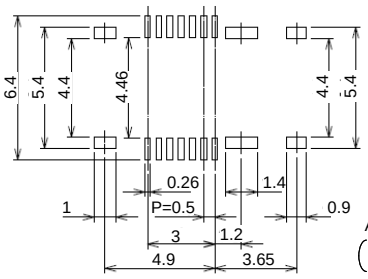

Aperture ratio
(Pads mounted contacts : 70%
Pads mounted shell :100%)

Figure 2.4 (A) Land pattern and metal mask recommended for TX/RX receptacles

Note 3 : The hatched areas in Figure 2.4(A) are close to metal shell, and there is a possibility of a short circuit. Make sure not to locate a Via without a solder mask.
Receptacles are common for BF4MB-3G and BF4MC-6G.

■ Recommended reflow temperature profile (lead-free solder)

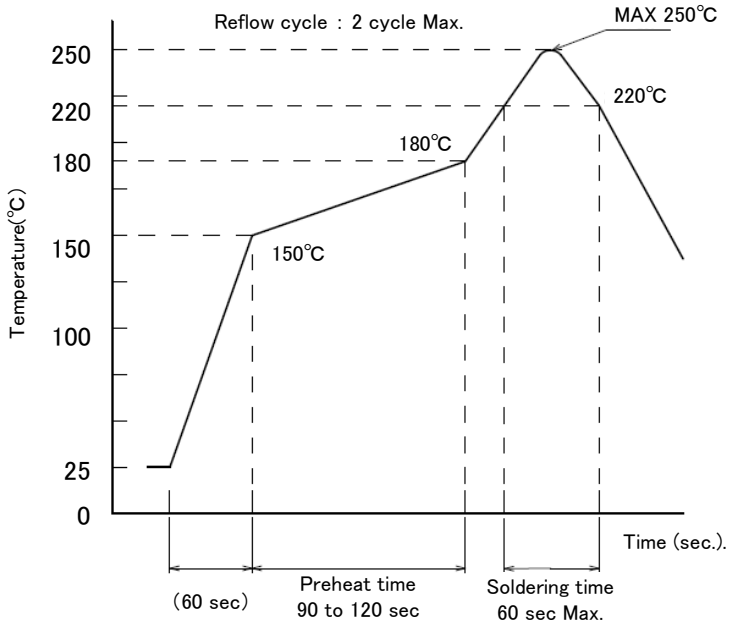

Figure 2.5 (B) Recommended reflow temperature profile (lead-free solder)

May.1.2024 Copyright 2024 HIROSE ELECTRIC CO., LTD. All Rights Reserved.

2.5. Packaging Specifications

The receptacles are supplied in reels or packs depending on the quantity in the packaging specifications. (See Table 2.2 (B) Receptacles).

■ Plug harness

The packaging of the plug harness varies by the ordered length and quantity.
Please contact your sales representative or engineering for details.

■Shape of the pack, reel and emboss of the receptacles

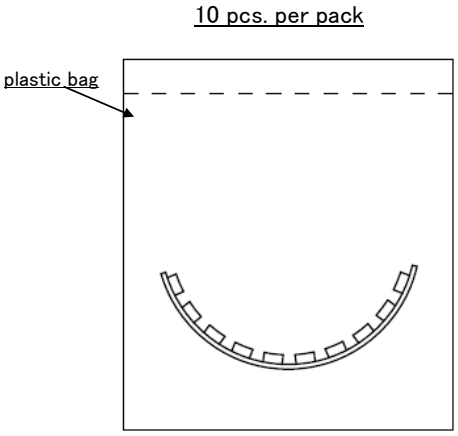

Figure 2.5 (A) Shape of a pack

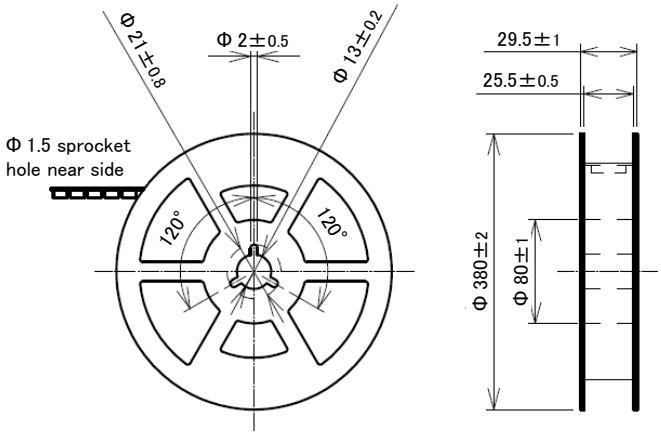

Figure 2.5 (B) Reel dimensions

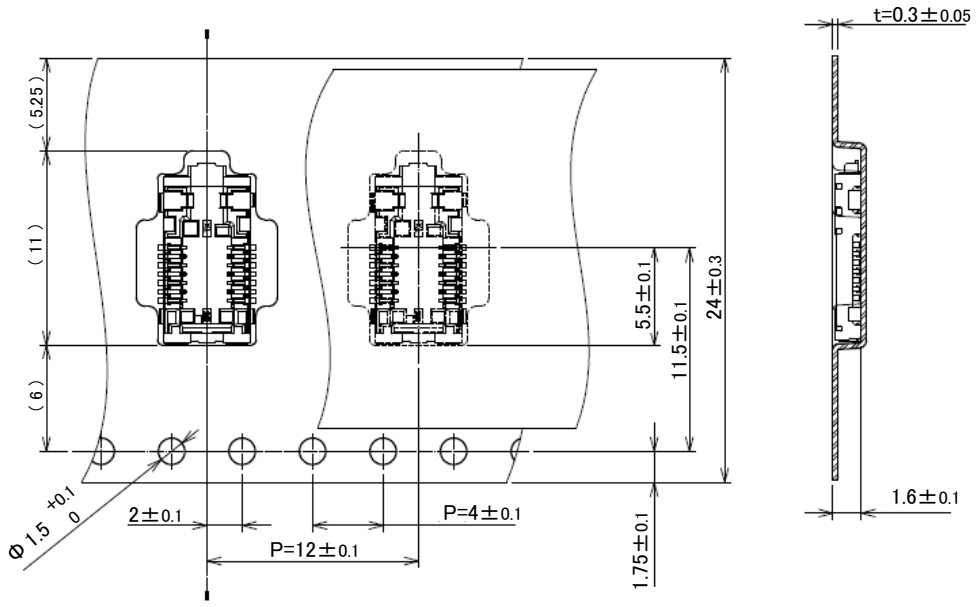

Figure 2.5 (C) Emboss carrier tape dimensions

May.1.2024 Copyright 2024 HIROSE ELECTRIC CO., LTD. All Rights Reserved.

2.6. Block Diagram

The transmission block diagram of the plug harness is shown below.

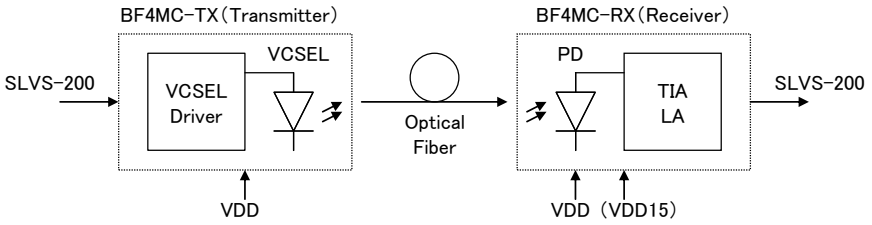

Figure 2.6 Block diagram

2.7. Pin Assignment

The pin arrangements below are the pin arrangements of the plug (TX/RX) of the plug harness.

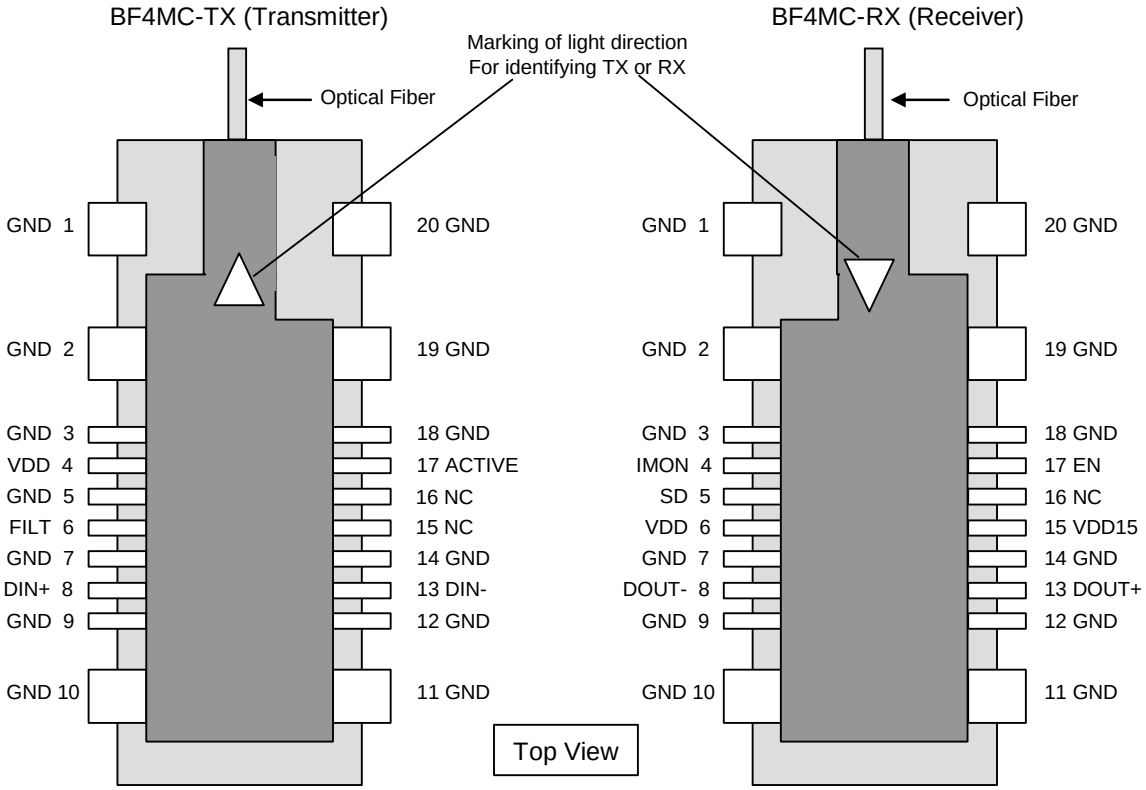

Figure 2.7 Pin assignment

May.1.2024 Copyright 2024 HIROSE ELECTRIC CO., LTD. All Rights Reserved.

2.8. Pin Functions

The details of the terminals (pins) of BF4MC-TX/RX are as described in the table below.

Table 2.8 (A) Descriptions of BF4MC-TX pins

Pin Number	Synbol	Name	Type	Details
4	VDD	Vsupply	Power	Power Supply DC+2.5V or +3.3V
1,2,3,5,7,9, 10,11,12,14, 18,19,20	GND	Ground	Ground	–
17	ACTIVE	Activate	Input	1:Active Mode 0:Sleep Mode
6	FILT	Filter	–	Decoupling condenser connection contact, Connected via 0.01 uF condenser
8	DIN+	Data Input +	Input	″+″SLVS Data input
13	DIN−	Data Input −	Input	″−″SLVS Data input
15,16	NC	No Connect	–	Not connected in normal operation

Table 2.8 (B) Descriptions of BF4MC-RX pins

Pin Number	Synbol	Name	Type	Details
6	VDD	Vsupply	Power	Power for PD 【Dual supply mode】 DC+2.5 V or +3.3 V 【Single supply mode】 DC+3.3 V
15	VDD15	Vdd 1.5V	Power	Power for Core 【Dual supply mode】 DC+1.5 V 【Single supply mode】 Not connected, or connected to Decoupling condenser
1,2,3,7,9, 10,11,12,14, 18,19,20	GND	Ground	Ground	–
5	SD	Signal Detect	Output	1:Detected (1.5 V CMOS) 0:Undetected
13	DOUT+	Data Output +	Output	″+″SLVS Data output
8	DOUT−	Data Output −	Output	″−″SLVS Data output
17	EN	Regulator Enable	Input	【Dual supply mode】 Not connected 【Single supply mode】 EN pin must be connect to VDD
4	IMON	Mirrored Photodiode Current Monitor	–	Inspection pin
4,16	NC	No Connect	–	Not connected in normal operation

May.1.2024 Copyright 2024 HIROSE ELECTRIC CO., LTD. All Rights Reserved.

2.9. Typical Layout

In order to minimize the noise leak from the digital circuit, make sure to separate the power supply for BF4MC-TX and that for BF4MC-RX and connect with inductors or bead inductors.
In addition, the SD output of BF4MC-RX is +1.5 V logic, it is necessary to convert the level when it is connected to +3.3 V CMOS. The level is converted by use of a transistor in the connection examples shown in Figure 2.9 (A) and Figure 2.9 (B). In this case, the logic is inverted.

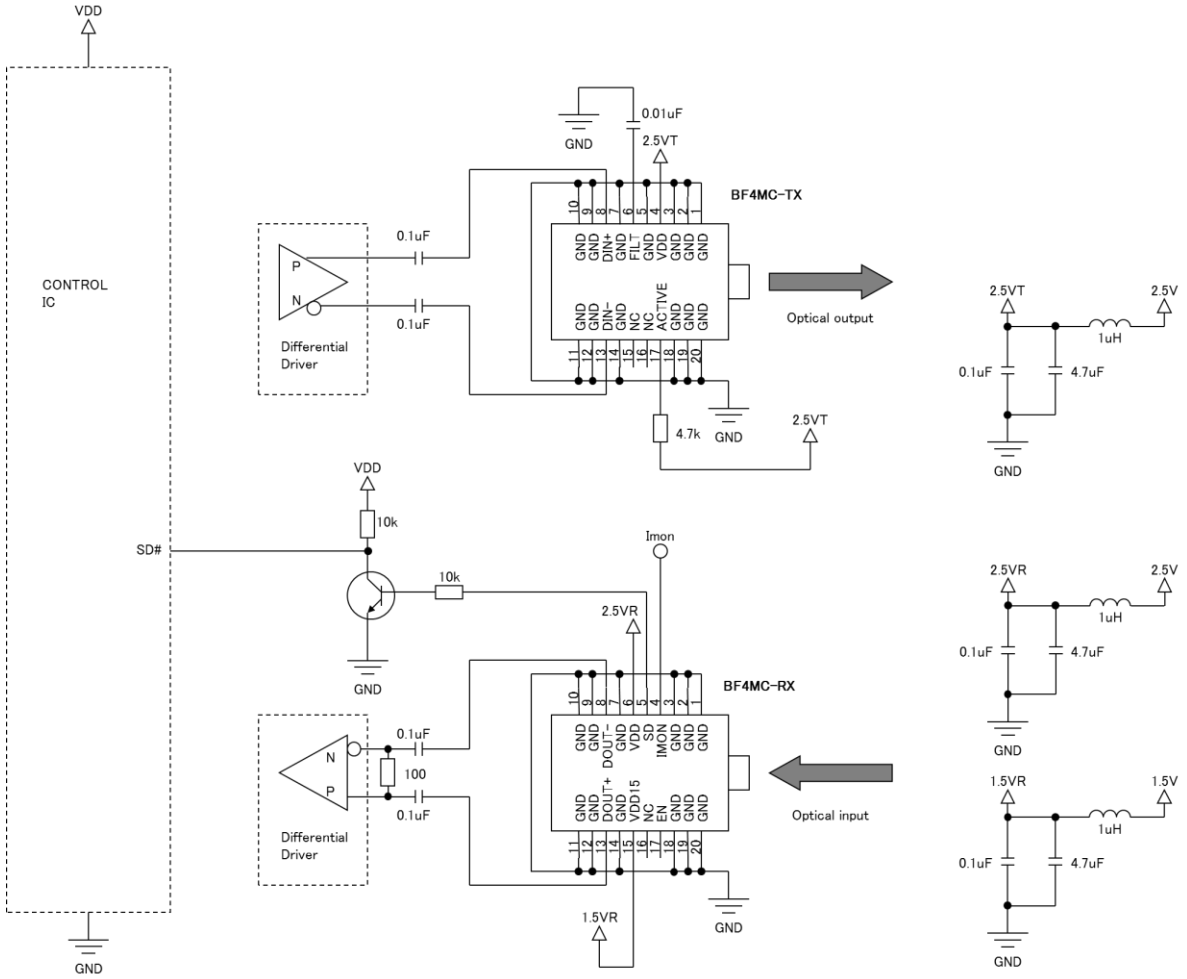

Figure 2.9 (A) Connection example of +2.5 V / +1.5 V (dual power supply mode)

May.1.2024 Copyright 2024 HIROSE ELECTRIC CO., LTD. All Rights Reserved.

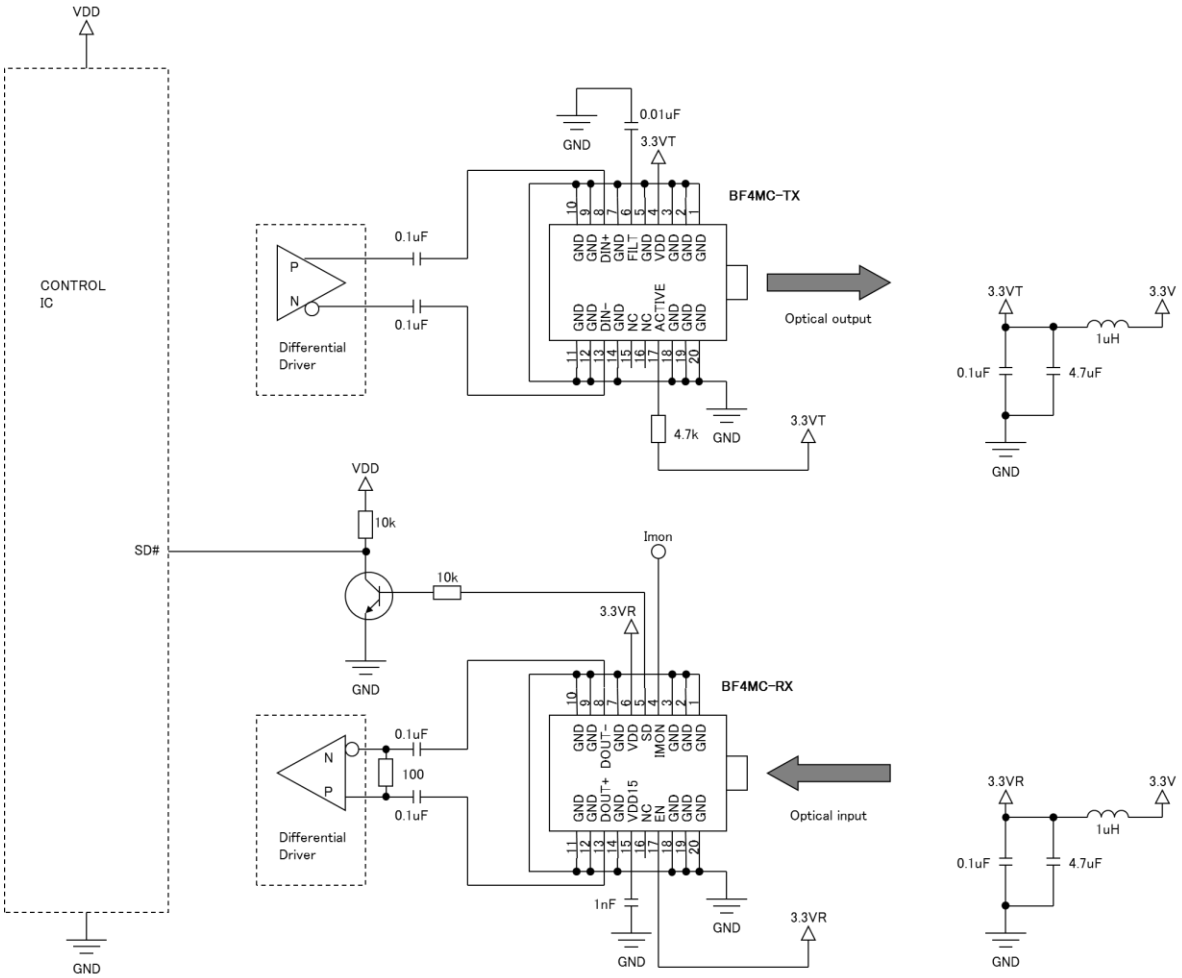

Figure 2.9 (B) Connection example of +3.3 V (single power supply mode)

May.1.2024 Copyright 2024 HIROSE ELECTRIC CO., LTD. All Rights Reserved.

3. Operating Characteristics

3.1. Absolute Maximum Ratings

Table 3.1 (A) Absolute maximum ratings of BF4MC-TX

	Symbol	Parameter	Min	Max	Unit
	VDD	Supply voltage	− 0.5	+ 4.5	V
	VDIN	Maximum voltage at Din +/−	− 0.5	+ 1.8	V
	VFILT	Maximum voltage at FILT	− 0.5	+ 2.8	V
	VACT	Maximum voltage at ACTIVE	− 0.5	+ 3.6	V
*1	Temp	Storage temperature range	−40	+85	℃
*2	VESD	Electrostatic discharge voltage capability		2	kV

***1) The temperature range does not include packing material.**

***2) Measured the value at BF4MC-TX each pins on the evaluation board refer to Fig 2.9(A) circuit.**

Table 3.1 (B) Absolute maximum ratings of BF4MC-RX

	Symbol	Parameter	Min	Max	Unit
	VDD	Supply voltage	− 0.5	+ 4.5	V
	VDD15	Core supply voltage	− 0.5	+ 1.6	V
	VEN	Maximum voltage at EN	− 0.5	+ 3.6	V
*3	Temp	Storage temperature range	−40	+85	℃
*4	VESD	Electrostatic discharge voltage capability		2	kV

***3) The temperature range does not include packing material.**

***4) Measured the value at BF4MC-RX each pins on the evaluation board refer to Fig 2.9(B) circuit.**

* Make sure to design the circuit so that the above maximum absolute ratings are not exceeded.

3.2. Recommended Operating Conditions

Table 3.2 (A) Recommended operating conditions for BF4MC-TX

Symbol	Parameter	Conditions	Min	Typ	Max	Unit
VDD	Supply voltage		+2.25	+2.5 / +3.3	+3.6	V
GND	Ground			0		V
Vnoise	Maximum allowed supply noise on Supply	0 < fnoise < 10 GHz			100	mVpp
Temp	Operating temperature range		−10		+60	℃

Table 3.2 (B) Recommended operating conditions for BF4MC-RX

Symbol	Parameter	Conditions	Min	Typ	Max	Unit
Dual power supply mode						
VDD	Supply voltage		+2.25	+2.5	+3.6	V
VDD15	Core Supply voltage		+1.45	+1.50	+1.55	V
Vnoise	Maximum allowed supply noise on Supply	0 < fnoise < 10 GHz			200	mVpp
V15noise	Maximum allowed supply noise on Core Supply	0 < fnoise < 10 GHz			50	mVpp
Temp	Operating temperature range		−10		+60	℃
Single Power supply mode						
VDD	Supply voltage		+3.2	+3.3	+3.4	V
Vnoise	Maximum allowed supply noise on Supply	0 < fnoise < 10 GHz			200	mVpp
Temp	Operating temperature range		−10		+60	℃

May.1.2024 Copyright 2024 HIROSE ELECTRIC CO., LTD. All Rights Reserved.

3.3. DC Characteristics

Table 3.3 (A) BF4MC-TX DC characteristics

Symbol	*Parameter*	*Conditions*	*Min*	*Typ*	*Max*	*Unit*
VDD	Supply voltage		+2.25		+3.6	V
IDD	Supply Current	VDD = +3.3V			11.6	mA
Isleep	Sleep Mode Supply Current	ACTIVE = low, Temp = 25℃			6	uA
Vact_H	Activation high input voltage level		1.0		VDD	V
Vact_L	Activation low input voltage level		0		+0.4	V

Table 3.3 (B) BF4MC-RX DC characteristics

Symbol	*Parameter*	*Conditions*	*Min*	*Typ*	*Max*	*Unit*
VDD	Supply voltage	Dual Mode (VDD = +2.5V)	+2.25	+2.5	+3.6	V
		(VDD15 = +1.5V)	+1.45	+1.50	+1.55	V
		Single Mode (VDD = +3.3V)	+3.2	+3.3	+3.4	V
IDD	Supply Current	Dual Mode (VDD = +2.5V)			9	mA
		(VDD15 = +1.5V)			22.4	
		Single Mode (VDD = +3.3V)			24.8	
VEN_H	Regulator enable high input voltage level	Single Mode (VDD = +3.3V)	1.0		VDD	V
VSD_H	SD output voltage logic level high		+1.0	+1.5	+1.6	V
VSD_L	SD output voltage logic level low		0		+0.1	V

3.4. AC Characteristics

Table 3.4 (A) BF4MC-TX AC characteristics

Symbol	*Parameter*	*Conditions*	*Min*	*Typ*	*Max*	*Unit*
BR	Bit rate	8B10B	0.05		6.25	Gbps
VCM_IN	Input common mode voltage		150		340	mV
|VIN_Diff|	Differential input voltage		200		1400	mVp
ZIN	Differential input impedance at Din+ and Din−			100		ohm
tD_ACT	Activation delay time				500	us
tD_DEACT	De-activation delay time				50	us

Table 3.4 (B) BF4MC-RX AC characteristics

Symbol	*Parameter*	*Conditions*	*Min*	*Typ*	*Max*	*Unit*
BR	Bit rate	8B10B	0.05		6.25	Gbps
tr	Output data rise time	20%−80%			45	ps
tf	Output data fall time	20%−80%			45	ps
VO_CM	Output common mode voltage		180		330	mV
|VO_Diff|	Output voltage swing		160		330	mVp
VO_H	Single ended output high voltage				650	mV
JP	Jitter peak to peak	BR = 6Gbps			65	ps
Zo	Output impedance at DOUT+/−			100		ohm
tSD_AT	SD assert time				0.5	us
tSD_DT	SD deassert time				50	us
Imon	Mirrored photodiode current montor	Operating at 6.25Gbps data input	20			uA

May.1.2024 Copyright 2024 HIROSE ELECTRIC CO., LTD. All Rights Reserved.

4. Functional Description

4.1. Transition Time for Sleep mode ⇔ Operation mode

The timing chart that shows the relation between the transmitter's Active signal and the receiver's Dout +signal is shown below:

Operation mode → Sleep mode < 50 us
Sleep mode ← Operation mode < 500 us

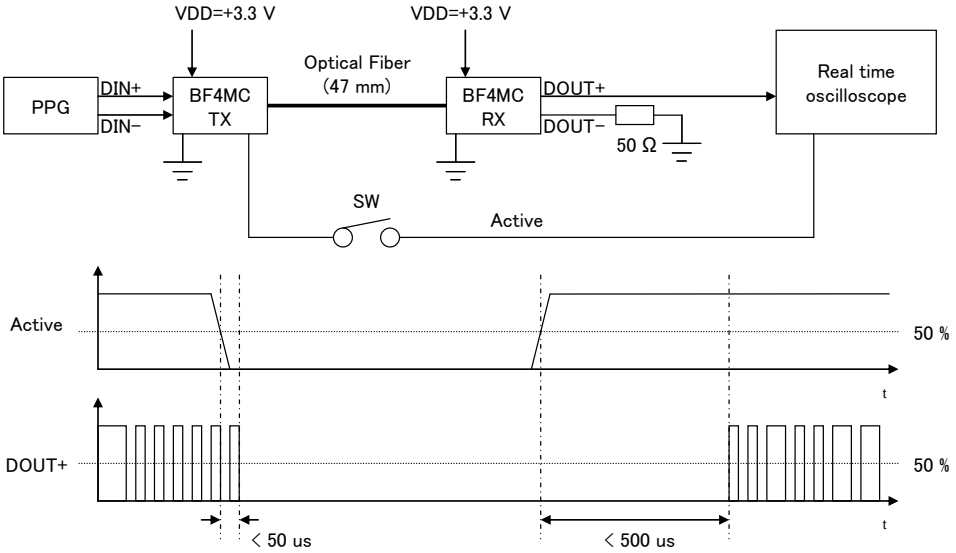

Figure 4.1 Sleep mode ⇔ Operation mode Transition time

4.2. Signal Detection Time

The timing chart illustrating the relation between the transmitter's Active signal and the receiver's SD (Signal Detect) signal is shown below.

Detection time with no signal < 50 us
Detection time with a signal < 0.5 us

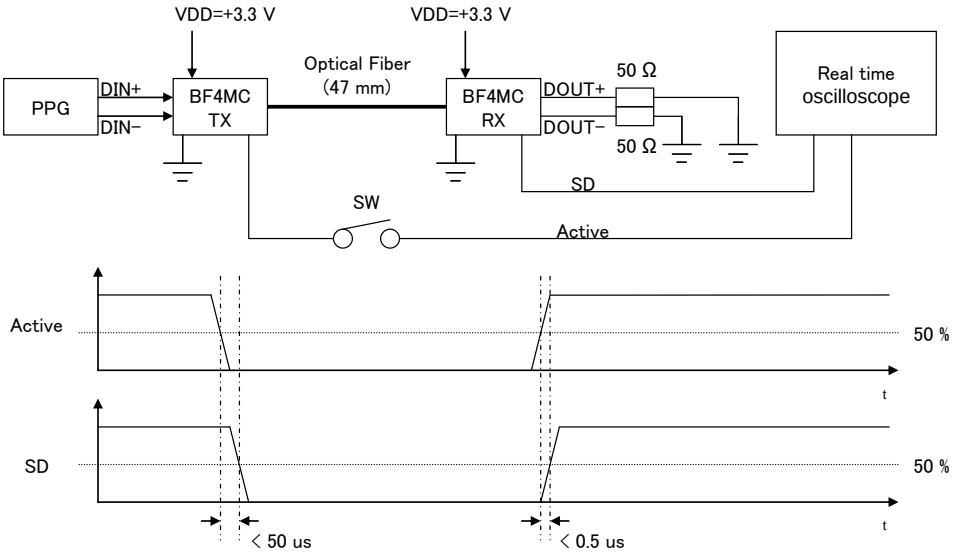

Figure 4.2 Signal detection time

May.1.2024 Copyright 2024 HIROSE ELECTRIC CO., LTD. All Rights Reserved.

4.3. Termination

The differential input DIN on the transmitter connector BF4MC-TX is equipped with a 100Ω termination.

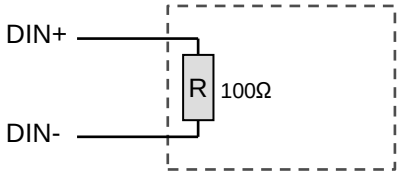

Figure 4.3 Built-in termination

4.4. DC Balance

The best performance of the BF4MC connector is assured by input of DC-balanced signals. It is recommended to use 8B/10B encoding.

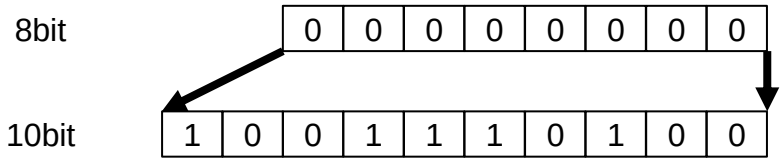

Figure 4.4 Example of 8B/10B encoding

* All bit values are "0" in an 8-bit data, but by executing 8B/10B encoding, the symbol which does not contain more than 5 consecutive bits of "0" or "1" is obtained.

4.5. LVDS Connection

The circuit of the connection for LVDS varies depending on whether the connection module of the receiver has an internal bias.

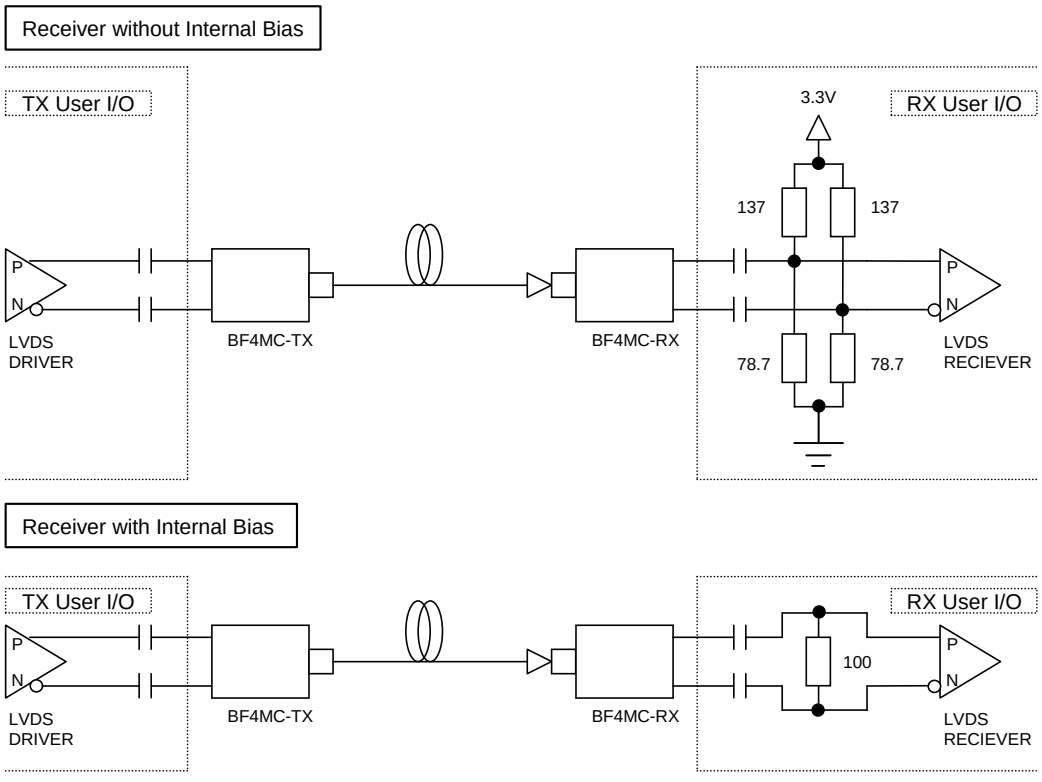

Figure 4.5 LVDS connection diagram

May.1.2024 Copyright 2024 HIROSE ELECTRIC CO., LTD. All Rights Reserved.

5. Typical Characteristics

5.1. Eye Diagram

The measurement connection diagram for transmission speed (Gbps) and the eye diagram for Min. (0.05 Gbps) and Max. (6.25 Gbps) of BF4MC are shown below.
(Conditions: Ambient temperature = 25°C, Fiber length = 47 mm fixed)

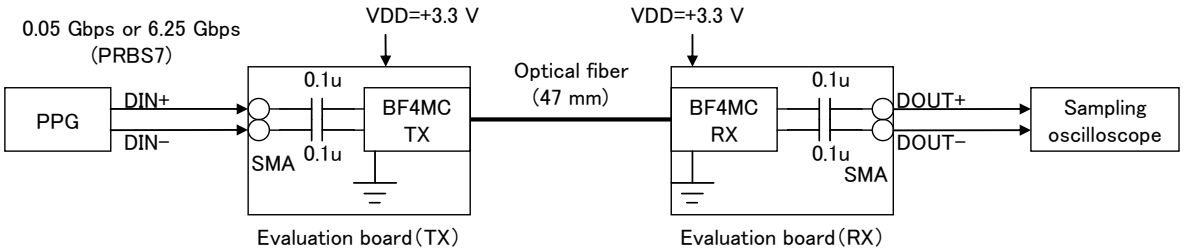

Figure 5.1 (A) Measurement connection diagram for transmission speed

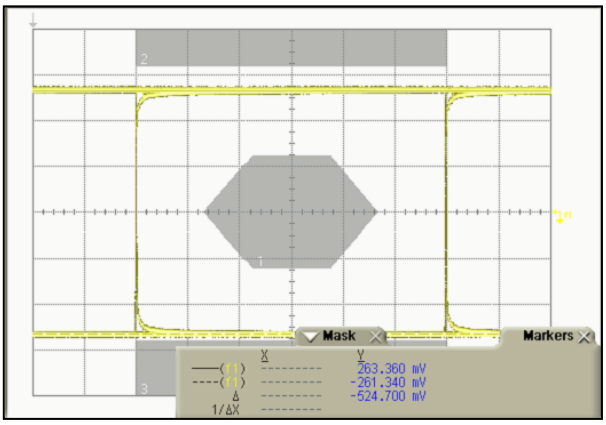

Figure 5.1 (B1)
Eye diagram for 0.05 Gbps

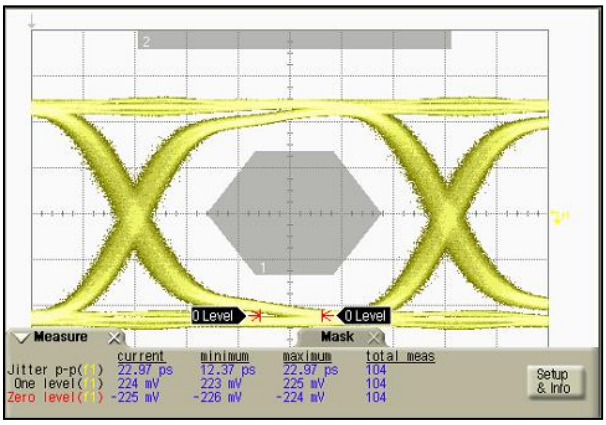

Figure 5.1 (B2)
Eye diagram for 6.25 Gbps

May.1.2024 Copyright 2024 HIROSE ELECTRIC CO., LTD. All Rights Reserved.

5.2. Characteristics variation in fiber length

The measurement connection diagram over different fiber length and the eye diagram for transmission over 2 m, 20 m and 100 m of BF4MC are shown below.
(Conditions: Ambient temperature = 25°C, Transmission speed = 6.25 Gbps)

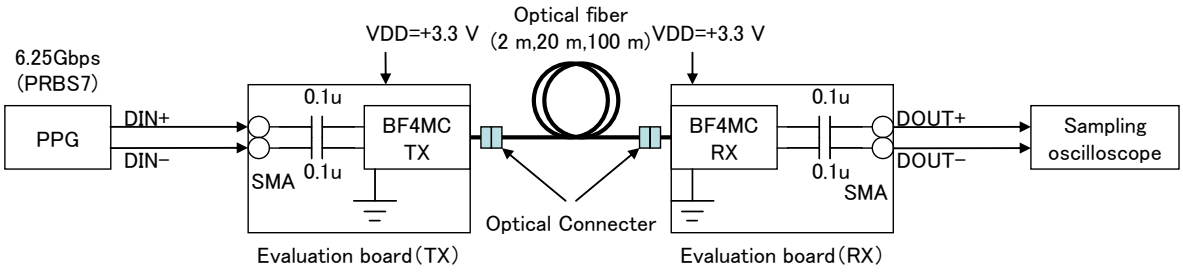

Figure 5.2 (A)
Measurement connection diagram for Characteristics variation in fiber length

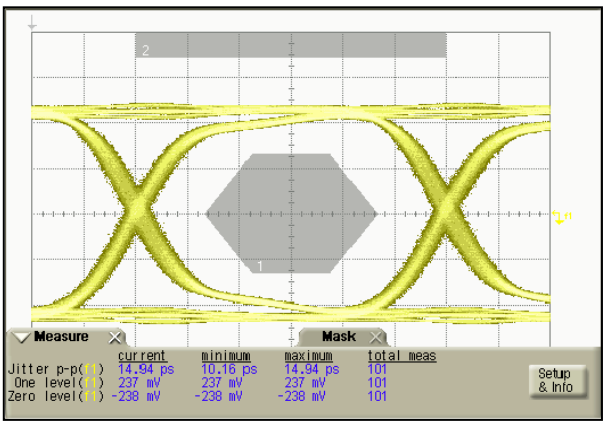

Figure 5.2 (B1)
Eye diagram with fiber length = 2 m

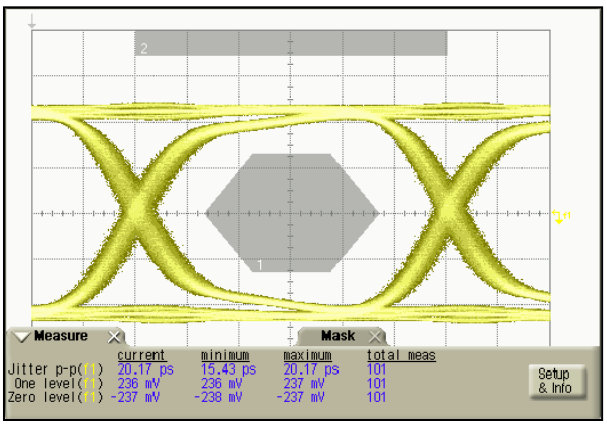

Figure 5.2 (B2)
Eye diagram with fiber length = 20 m

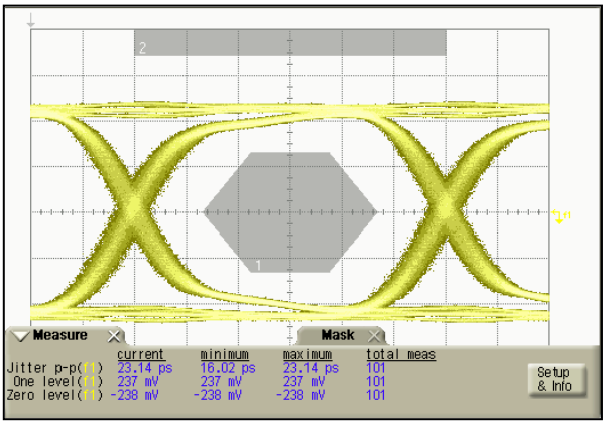

Figure 5.2 (B3)
Eye diagram with fiber length = 100 m

May.1.2024 Copyright 2024 HIROSE ELECTRIC CO., LTD. All Rights Reserved.

5.3. Temperature Characteristics

The measurement connection diagram of the temperature performance and the eye diagram for transmission at the ambient temperature of -10°C and +60°C of BF4MC are shown below.
(Conditions: Fiber length = 47 mm, Transmission speed = 6.25 Gbps)

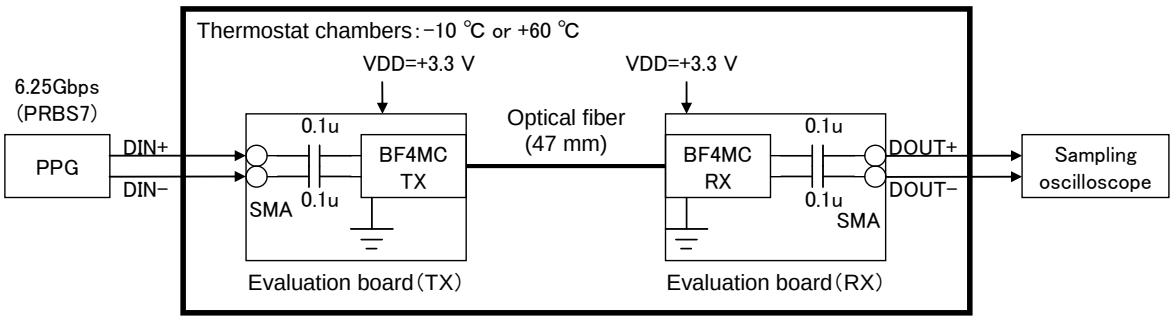

Figure 5.3 (A) Measurement connection diagram for temperature characteristics

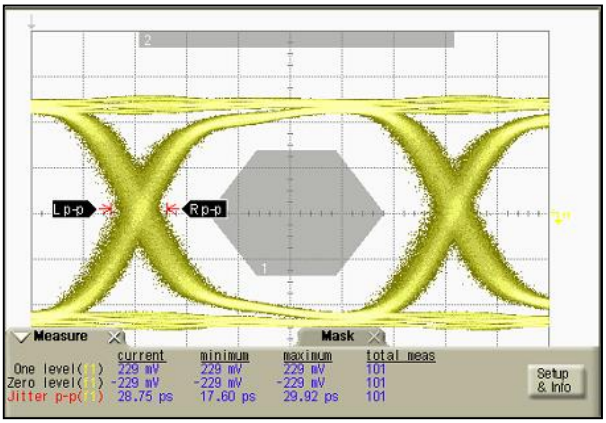

Figure 5.3 (B1) Eye diagram at -10°C

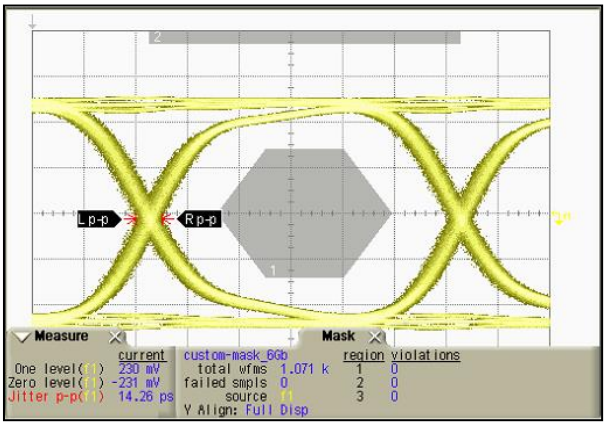

Figure 5.3 (B2) Eye diagram at +60°C

May.1.2024 Copyright 2024 HIROSE ELECTRIC CO., LTD. All Rights Reserved.

6. Precautions

This product uses an optical fiber as transmission medium. An optical fiber is made of quartz glass and more careful handling is required compared to an electric wire of equivalent size. In addition, the attention should be paid for static electricity since the connector is equipped with a semiconductor chip.

6.1. Optical Fiber Handling

An optical fiber may be damaged by external stress including sharp bending radius, excessive tensile stress, and lateral pressure.

Bending radius

The bending radius of the fiber affects the failure rate (product life), and sharp bending in wiring may decrease product life. It is recommended to wire the fiber (for arrangement within a device) at the bending radius of at least 10 mm.

Tension to bent fiber

It is recommended to wire the fiber (for arrangement within a device) so that tensile stress is not applied to bent section of the fiber.

Tensile stress to a connector

The parts should be arranged so that the fiber tension at the connector is zero when the wiring is completed. The tensile stress in lateral and longitudinal to the connector will cause damage to the fiber.

Lateral pressure

Make sure to avoid the wiring where the pressure is applied to the lateral face of the fiber.

[Example] The fiber is stuck between the parts.
The fiber is stuck between the board and chassis.
The fiber is bundled together with another part or cable.

6.2. Countermeasures Against Static Electricity

The product is equipped with a semiconductor and care must be taken against static electricity during handling of the product.
The product is designed to have the structure to prevent a direct touch to the signal terminal during use to ensure ESD resistance. However, it is recommended to take precautionary measures against static electricity when handling the product.

[Examples] Wearing electrically-conductive (or antistatic) gloves during work.
Wearing a wrist strap.
Grounding of the work table.

May.1.2024 Copyright 2024 HIROSE ELECTRIC CO., LTD. All Rights Reserved.

6.3. Connector Mating Method

Do not hold the fiber to position connector for mating.

Make sure to hold the plug body (the base of the fiber) when positioning.
Holding just the fiber when positioning the connector may cause excessive stress on the fiber and the fiber fixing part, causing damage.

Make sure to mate the connectors in a correct combination.

There are transmitter (TX) and receiver (RX) respectively for the plugs and receptacles. Make sure to check the identification part before fitting.

Make sure to mate the connectors in a correct direction.

The plug has distinct top and a bottom. Pay attention to the fitting direction when mating to the connectors.

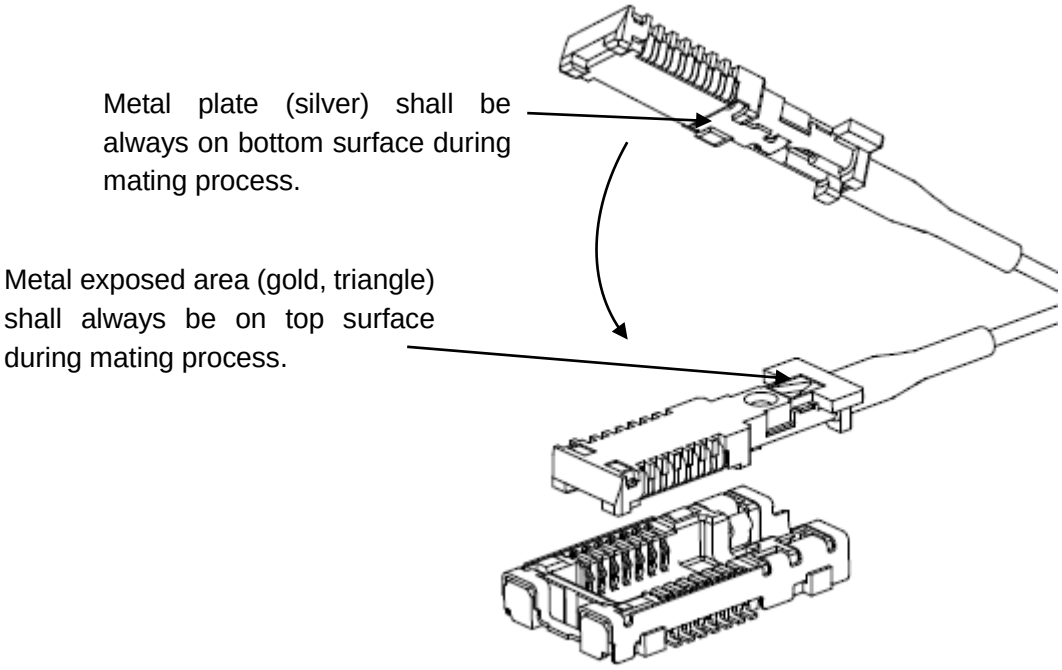

Figure 6.3 Mating method

Do not mate the connector while power is being supplied

Make sure to insert or remove the plug after the power supply is stopped. Hot plugging/unplugging may cause damage.

Maximum number of times of the plug insertion/removal

The number of times of insertion/removal of the plug harnesses and receptacles shall be 50 times at maximum.

May.1.2024 Copyright 2024 HIROSE ELECTRIC CO., LTD. All Rights Reserved.

6.4. Connector Unmating Method

Cautions:

Do not pull the fiber when removing the connector.

When removing the connector, make sure to hook the plug with an unmating tool so that the stress is not applied to the cable. Pulling the cable to remove it may cause a breakage in the cable.

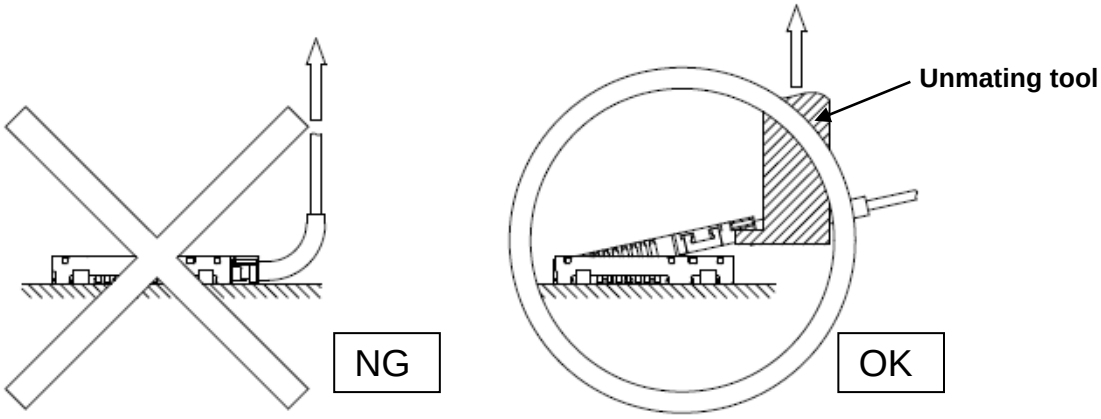

Figure 6.4 (A) Cautions upon removal

Do not remove the plug while power is being supplied.

Make sure to remove the plug after the power supply is stopped. Hot plugging / unplugging may cause damage.

Unmating tool:

BF4-T2 is available as the unmating tool.

BF4-T2 has two types of hook in order to avoid interference with the parts mounted on the board or the chassis. Use either one according to the application.

Table 6.4 (B) HRS unmating tool

HRS No.	Product Name	Description
831-0006-0 00	BF4-T2	Metal stamping type

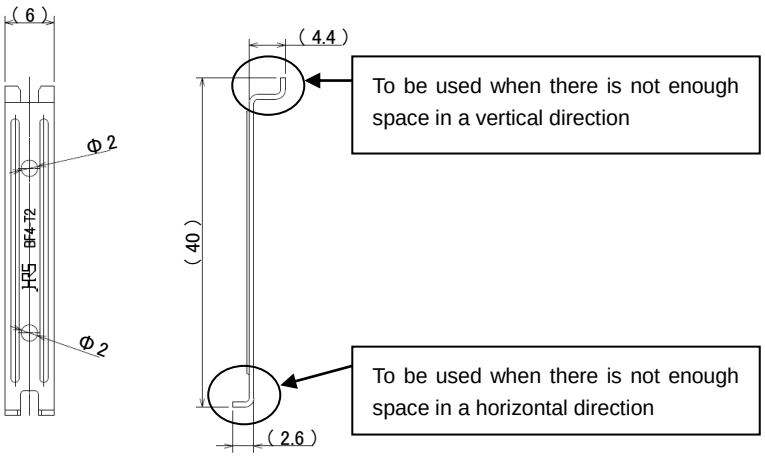

Figure 6.4 (B) Unmating tool

May.1.2024 Copyright 2024 HIROSE ELECTRIC CO., LTD. All Rights Reserved.

6.5. Fail-safe design

The Product is equipped with a semiconductor for optical-electrical conversion.
Although HRS stands behind the quality and reliability of its products, semiconductor products have specific characteristics such as the occurrence of failure at a certain rate and malfunctions under certain use conditions.

Please be sure to implement safety measures to guard them against the possibility of physical injury, or injury in the event of the failure of a Hirose product, such as safety design including but not limited to redundancy, malfunction prevention or any other appropriate measures.

In the unlikely event a problem occurs due to the occurrence of failure, we respond appropriately and promptly after consultation.

May.1.2024 Copyright 2024 HIROSE ELECTRIC CO., LTD. All Rights Reserved.

6.6. Notes on handling of the product

(Notes on change of information)

- The content of this document including the information regarding the connector (hereafter, the Product) is subject to change without prior notice.

(Prohibition of reproduction)

- No part of this document may be copied or reproduced without prior written consent of Hirose Electric Co., Ltd. (hereafter, Hirose). Even if written consent of Hirose is obtained, it is prohibited to amend any part of this document and copy or reproduce it. Hirose shall assume no obligation or liability in connection with such amended information or reproduction.

(Responsibilities for design safety)

- Hirose shall assume no responsibilities for the support for the application of the Product or the product design of the customer. The customer shall be responsible for the product and application of the customer in which the Product is used. The customer shall take appropriate design and operational safety measures in order to minimize the potential risks predicted for the product and application of the customer in which the Product is used.

(Responsibilities for determination of the suitability)

- When using the Product, the customer shall ensure safe design at his/her own responsibility so that malfunction or failure of the Product would never cause an infringement on the life, body or property. For design or use of the Product, make sure to refer to the materials (including the catalog, specifications, and design note) and follow the same. When using information including the product data provided in the document, technical data or circuit examples shown in the figures and tables, the customer shall evaluate the information on the customer's product and determine the suitability at the customer's own responsibility.

(Responsibilities for specific applications)

- Make sure to consult with our sales representative in advance when considering of use for specific applications that require extremely high quality and reliability (e.g. nuclear equipment, aerospace systems, transportation equipment and various safety related equipment).

(Prohibition of replication)

- Do not disassemble reverse-engineer, modify, analyze or replicate the Product.

(Prohibition of application to prohibited products)

- The Product must not be used for any product that manufacture, use and sale of which is prohibited by the domestic or international laws, regulations and ordinances.

(Notes on the guarantee and license)

- The technical data provided in the materials of the Product is intended to describe the representative behaviors and application of the Product. It is not to guarantee the intellectual property rights or any other rights of Hirose nor a third party and not to grant the license.

(Notes on the warranties for the contract)

- Unless otherwise provided in a written contract or other documents (specifications) agreed between the customer and Hirose, Hirose makes no warranties of any kind (including, but not limited to, warranties of the function and operation, warranties of merchantability, warranties of suitability for a specific application or purpose and warranties of correctness of the information).

(Notes on export)

- To export the Product to other countries, the exporter shall conduct the applicability determination based on Foreign Exchange and Foreign Trade Act of Japan. If you wish to have the applicability determination sheet issued by Hirose, contact our sales representative. Note that in the export arrangement, the customer shall be an exporter and responsible for compliance with all the applicable laws and regulations and terms and conditions of the agreement with Hirose.

May.1.2024 Copyright 2024 HIROSE ELECTRIC CO., LTD. All Rights Reserved.

6.7. Notes on use of the product

(Notes on the specification range)

- Using the Product under conditions beyond the specification range (for voltage, current and temperature) provided in this document may result in an accident (including ignition, heat generation, and smoking). Confirm the document thoroughly and make sure to use the Product within the specification range.

(Notes on the laser)

- The laser beam is emitted from the end-face of the optical fiber in operation. It may cause eye injury or loss of sight if it enters the eyes. Do not stare directly into the end-face of the optical fiber.
  The laser beam is emitted from the VCSEL in operation. It may not be visible depending on its wavelength, but nonetheless it may cause eye injury or loss of sight if the laser beam or its reflected beam enters the eyes. Do not stare (look into) the laser beam directly.

(Notes on fracture of the optical fiber)

- In case of fracture of the optical fiber used in the Product, turn off the power immediately.
  In addition, Use care when handling it to avoid injury from fractured parts or fragments.

(Notes on use of GaAs)

- The Product is equipped with a semiconductor within the connector and contains gallium arsenide (GaAs). Vapor and powder of GaAs is harmful to the human body and the environment, please note the following.
  - When disposing of the Product, the following disposal process is recommended.
  - To consign the disposal to a disposer licensed to collect, transport and dispose of materials containing gallium arsenide.
  - To separate it from the general industrial waste and household waste and handle it under strict supervision as the special industrial waste material until the final disposal.

(Notes on waterproofing)

- The Product is not waterproof and a failure due to condensation or exposure to water is not warranted. If condensation or exposure to water may occur, make sure to take appropriate waterproofing measures.

(Notes on use of chemicals)

- Avoid the environment where acidic or alkaline chemicals and organic solvent are used or direct use of such chemicals on the Product. The Product may deteriorate and the features may be affected.

(Notes on the environment including gases)

- Avoid the use of the Product in gas environments with chlorides or sulfides. The Product may deteriorate and features may be affected.

(Notes on storage)

- Store the Product out of corrosive substances, corrosive gases, high temperature and humidity or direct sunlight.
  Do not apply excessive pressure or vibration to the Product.
  It may cause deterioration, deformation, damage or failure of the Product.

(Notes on resin molded part)

- The resin molded part of the Product may contain black spots or its color may be slightly different, but that has no effect on the product performance.

May.1.2024 Copyright 2024 HIROSE ELECTRIC CO., LTD. All Rights Reserved.

7. Revision History

Table 7 Revision history

Revision No.	*Description (Major changes)*	*Date*
1.0	Initial release.	2014.08.27
1.1	Figure 2.6 Block diagram (SLVD-200 → SLVS-200) Change Table 3.1 (A) Absolute maximum ratings of BF4MC-TX and Table 3.1 (B) Absolute maximum ratings of BF4MC-RX: Storage temperature range MAX(80 → 85℃) Change Table 3.4 (A) BF4MC-TX AC characteristics and Table 3.4 (B) BF4MC-RX AC characteristics: Bit rate conditions (64B66B) Delete Bit rate Max (6 → 6.25Gbps) Change	2014.11.05
1.2	Table 3.1 (A) Absolute maximum ratings of BF4MC-TX and Table 3.1 (B) Absolute maximum ratings of BF4MC-RX: Note added Table 3.3 (B) BF4MC-RX DC characteristics: Parameter change of VSD_H (Min: +1.1V → +1.0V, Max: +1.55V → +1.6V) Table 3.4 (B) BF4MC-RX AC characteristics: Parameter change of VO_CM (Min: 160mV → 180mV)	2016.04.27
1.3	6.5. Fail-safe design Add item. According to the above, item number change. 6.5. → 6.6. Notes on handling of the product 6.6. → 6.7. Notes on use of the product	2017.07.27
1.4	6.6. Notes on handling of the product → Partial Removal	2020.01.07

May.1.2024 Copyright 2024 HIROSE ELECTRIC CO., LTD. All Rights Reserved.