CUDEVICES

SERIES: RDS-74R-254 | **DESCRIPTION:** ROTARY DIP SWITCH

FEATURES

- 10 and 16 positions
- flat actuator
- right angle
- 2.54 mm pitch

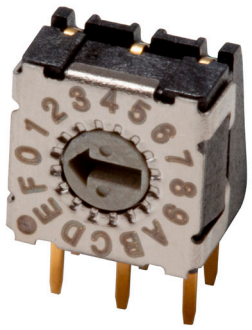

RoHS IP67

SPECIFICATIONS

parameter	conditions/description	min	typ	max	units
rated voltage	switching non-switching			42 42	Vdc Vdc
rated current	switching non-switching			100 400	mA mA
withstanding voltage	for 1 minute		250		Vac
contact resistance				80	mΩ
insulation resistance	at 250 Vdc	100			MΩ
operating torque		90	120	150	gf*cm
actuator travel	continuous rotation		360		degrees
operating temperature		-60		125	°C
storage temperature		-60		125	°C
life	at rated voltage, current, 15~20 cycles/minute		25,000		steps
flammability rating	UL94V-0				
RoHS	yes				
IP level	IP67 (IEC 60529:2001)				

SOLDERABILITY

parameter	conditions/description	min	typ	max	units
hand soldering	for maximum 3 seconds			350	°C
wave soldering	for maximum 5 seconds			280	°C

PART NUMBER KEY

RDS - XXS - 74R - 254 - D

Base Number

No. of Positions:
10 =10 Positions
16 =16 Positions

MECHANICAL DRAWING

units: mm
tolerance: ±0.3 mm
unless otherwise noted

ITEM	DESCRIPTION	MATERIAL	PLATING/COLOR
1	actuator	LCP (UL94V-0)	red (10 position) gray (16 position)
2	housing	LCP (UL94V-0)	black
3	face plate	stainless steel	
4	terminals	copper alloy	gold

10 POSITION

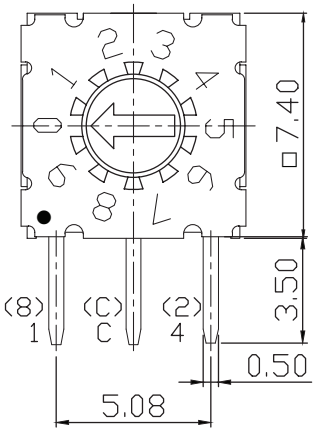

ON ○					
OFF ●		CODE			
TYPE	POS	1	2	4	8
10 STEP	0	●	●	●	●
	1	○	●	●	●
	2	●	○	●	●
	3	○	○	●	●
	4	●	●	○	●
	5	○	●	○	●
	6	●	○	○	●
	7	○	○	○	●
	8	●	●	●	○
	9	○	●	●	○
16 STEP	A	●	○	●	○
	B	○	○	●	○
	C	●	●	○	○
	D	○	●	○	○
	E	●	○	○	○
	F	○	○	○	○

16 POSITION

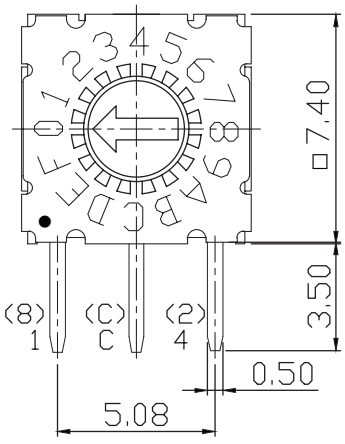

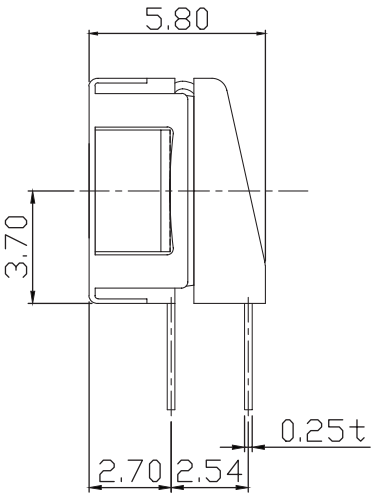

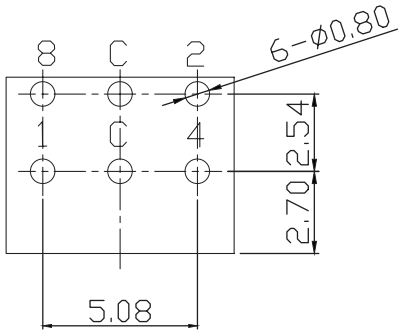

Recommended PCB Layout
Top View

PACKAGING

units: mm

Tube Size: 15.30 x 13.30 x 540 mm
Tube QTY: 70 pcs

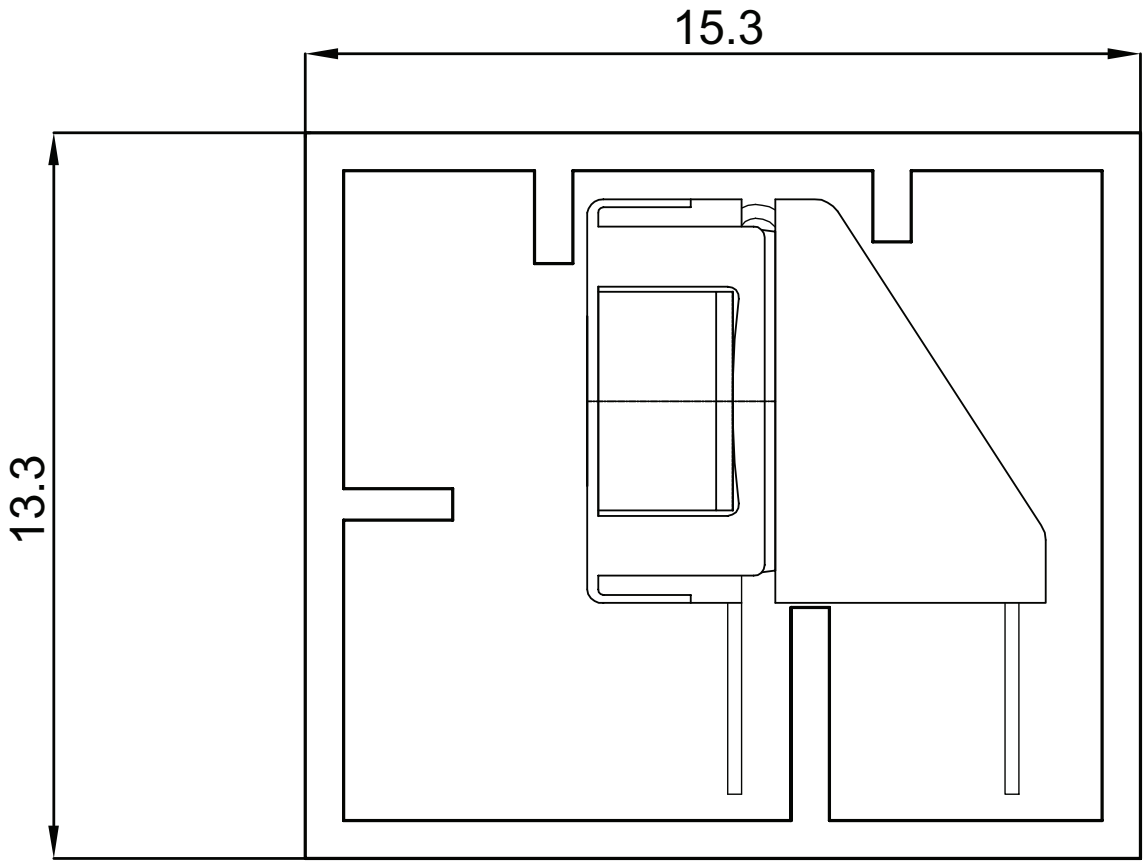

REVISION HISTORY

rev.	description	date
1.0	initial release	10/01/2020
1.01	logo, datasheet style update	08/05/2022

The revision history provided is for informational purposes only and is believed to be accurate.

CUI Devices offers a one (1) year limited warranty. Complete warranty information is listed on our website.

CUI Devices reserves the right to make changes to the product at any time without notice. Information provided by CUI Devices is believed to be accurate and reliable. However, no responsibility is assumed by CUI Devices for its use, nor for any infringements of patents or other rights of third parties which may result from its use.

CUI Devices products are not authorized or warranted for use as critical components in equipment that requires an extremely high level of reliability. A critical component is any component of a life support device or system whose failure to perform can be reasonably expected to cause the failure of the life support device or system, or to affect its safety or effectiveness.

cuidevices.com