NUP4201MR6

Transient Voltage Suppressors

ESD Protection Diodes with Low Clamping Voltage

The NUP4201MR6 transient voltage suppressor is designed to protect high speed data lines from ESD, EFT, and lighting.

Features

- Low Clamping Voltage
- Stand−Off Voltage: 5 V
- Low Leakage
- TSOP−6 is footprint compatible with SC−74, SC−59 6 Lead and SOT−23 6 Lead
- Protection for the Following IEC Standards:
  IEC 61000−4−2 Level 4 ESD Protection
- UL Flammability Rating of 94 V−0
- Pb−Free Package is Available

Typical Applications

- High Speed Communication Line Protection
- USB 1.1 and 2.0 Power and Data Line Protection
- Digital Video Interface (DVI)
- Monitors and Flat Panel Displays

MAXIMUM RATINGS (T_J = 25°C unless otherwise noted)

Rating	Symbol	Value	Unit
Peak Power Dissipation 8 x 20 μS @ T_A = 25°C (Note 1)	P_{pk}	500	W
Operating Junction Temperature Range	T_J	−40 to +125	°C
Storage Temperature Range	T_{stg}	−55 to +150	°C
Lead Solder Temperature − Maximum (10 Seconds) NUP4201MR6T1 NUP4201MR6T1G	T_L	 235 260	 °C °C
Human Body Model (HBM) Machine Model (MM) IEC 61000−4−2 Air (ESD) IEC 61000−4−2 Contact (ESD)	ESD	16000 400 20000 20000	V
IEC 61000−4−4 (5/50 ns)	EFT	40	A

Stresses exceeding Maximum Ratings may damage the device. Maximum Ratings are stress ratings only. Functional operation above the Recommended Operating Conditions is not implied. Extended exposure to stresses above the Recommended Operating Conditions may affect device reliability.

1. Non−repetitive current pulse per Figure 5 (Pin 5 to Pin 2)

See Application Note AND8308/D for further description of survivability specs.

ON Semiconductor®

http://onsemi.com

TSOP−6 LOW CAPACITANCE DIODE TVS ARRAY 500 WATTS PEAK POWER 6 VOLTS

PIN CONFIGURATION AND SCHEMATIC

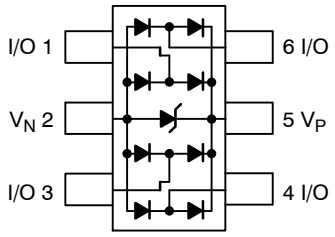

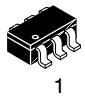

TSOP−6
CASE 318G
PLASTIC

MARKING DIAGRAM

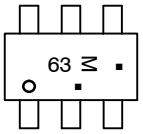

63 = Specific Device Code
M = Date Code
▪ = Pb−Free Package
(Note: Microdot may be in either location)
*Date Code orientation may vary depending upon manufacturing location.

ORDERING INFORMATION

Device	Package	Shipping
NUP4201MR6T1	TSOP−6	3000/Tape & Reel
NUP4201MR6T1G	TSOP−6 (Pb−Free)	3000/Tape & Reel

†For information on tape and reel specifications, including part orientation and tape sizes, please refer to our Tape and Reel Packaging Specification Brochure, BRD8011/D.

© Semiconductor Components Industries, LLC, 2009

ELECTRICAL CHARACTERISTICS

(T_A = 25°C unless otherwise noted)

Symbol	Parameter
I_{PP}	Maximum Reverse Peak Pulse Current
V_C	Clamping Voltage @ I_{PP}
V_{RWM}	Working Peak Reverse Voltage
I_R	Maximum Reverse Leakage Current @ V_{RWM}
V_{BR}	Breakdown Voltage @ I_T
I_T	Test Current
I_F	Forward Current
V_F	Forward Voltage @ I_F
P_{pk}	Peak Power Dissipation
C	Capacitance @ V_R = 0 and f = 1.0 MHz

*See Application Note AND8308/D for detailed explanations of datasheet parameters.

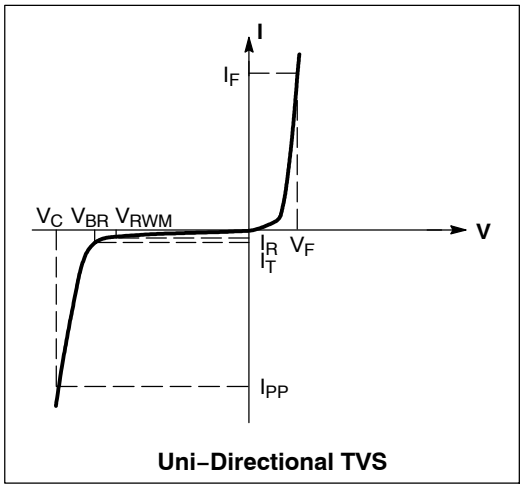

Uni−Directional TVS

ELECTRICAL CHARACTERISTICS (T_J=25°C unless otherwise specified)

Parameter	Symbol	Conditions	Min	Typ	Max	Unit
Reverse Working Voltage	V_{RWM}	(Note 2)			5.0	V
Breakdown Voltage	V_{BR}	I_T=1 mA, (Note 3)	6.0			V
Reverse Leakage Current	I_R	V_{RWM} = 5 V			5.0	μA
Clamping Voltage	V_C	I_{PP} = 5 A (Note 4)			12.5	V
Clamping Voltage	V_C	I_{PP} = 8 A (Note 4)			20	V
Maximum Peak Pulse Current	I_{PP}	8x20 μs Waveform (Note 4)			25	A
Junction Capacitance	C_J	V_R = 0 V, f=1 MHz between I/O Pins and GND		3.0	5.0	pF
Junction Capacitance	C_J	V_R = 0 V, f=1 MHz between I/O Pins		1.5	3.0	pF
Clamping Voltage	V_C	@ I_{PP} = 1 A (Notes 5 and 6)			16.6	V
Clamping Voltage	V_C	Per IEC 61000−4−2 (Note 7)	Figure 1 and 2			V

2. TVS devices are normally selected according to the working peak reverse voltage (V_{RWM}), which should be equal or greater than the DC or continuous peak operating voltage level.
3. V_{BR} is measured at pulse test current I_T.
4. Non−repetitive current pulse per Figure 5 (Pin 5 to Pin 2)
5. Non−repetitive current pulse per FIgure 5 (Any I/O Pins)
6. Surge current waveform per Figure 5.
7. For test procedure see Figures 3 and 4 and Application Note AND8307/D.

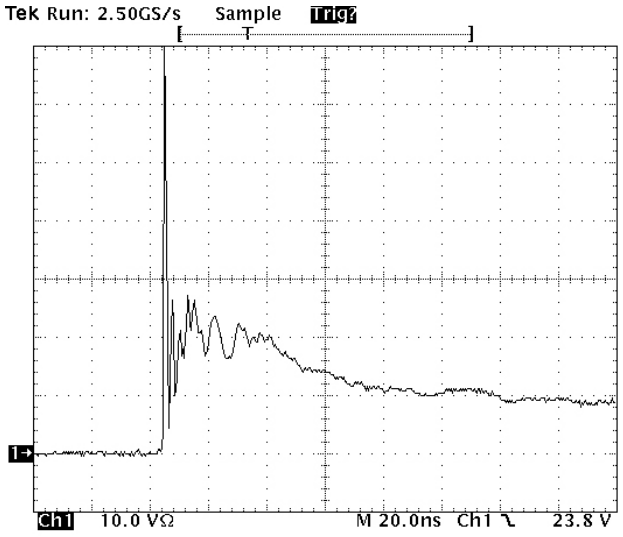

Figure 1. ESD Clamping Voltage Screenshot Positive 8 kV Contact per IEC61000−4−2

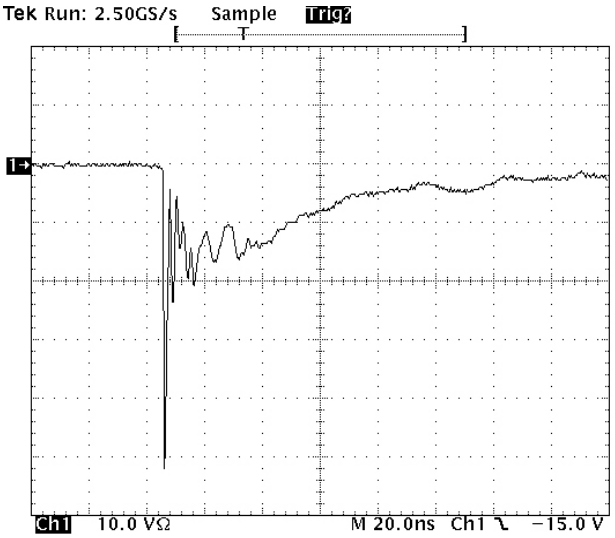

Figure 2. ESD Clamping Voltage Screenshot Negative 8 kV Contact per IEC61000−4−2

IEC 61000−4−2 Spec.

Level	Test Voltage (kV)	First Peak Current (A)	Current at 30 ns (A)	Current at 60 ns (A)
1	2	7.5	4	2
2	4	15	8	4
3	6	22.5	12	6
4	8	30	16	8

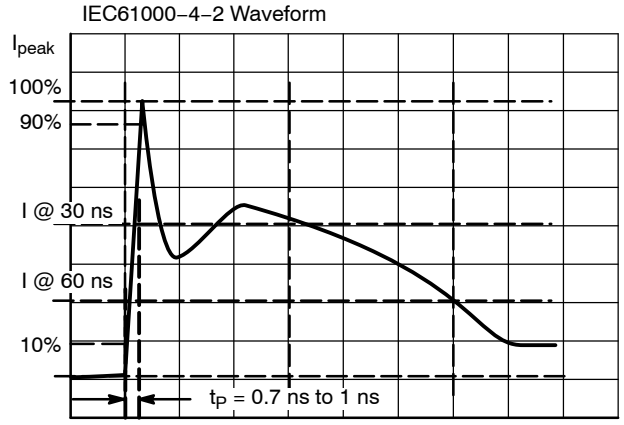

Figure 3. IEC61000−4−2 Spec

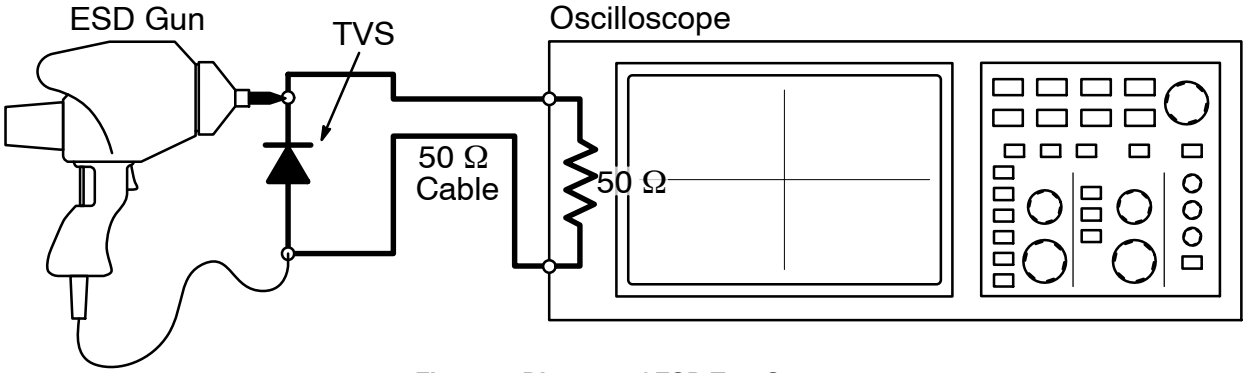

Figure 4. Diagram of ESD Test Setup

The following is taken from Application Note AND8308/D − Interpretation of Datasheet Parameters for ESD Devices.

ESD Voltage Clamping

For sensitive circuit elements it is important to limit the voltage that an IC will be exposed to during an ESD event to as low a voltage as possible. The ESD clamping voltage is the voltage drop across the ESD protection diode during an ESD event per the IEC61000−4−2 waveform. Since the IEC61000−4−2 was written as a pass/fail spec for larger systems such as cell phones or laptop computers it is not clearly defined in the spec how to specify a clamping voltage at the device level. ON Semiconductor has developed a way to examine the entire voltage waveform across the ESD protection diode over the time domain of an ESD pulse in the form of an oscilloscope screenshot, which can be found on the datasheets for all ESD protection diodes. For more information on how ON Semiconductor creates these screenshots and how to interpret them please refer to AND8307/D.

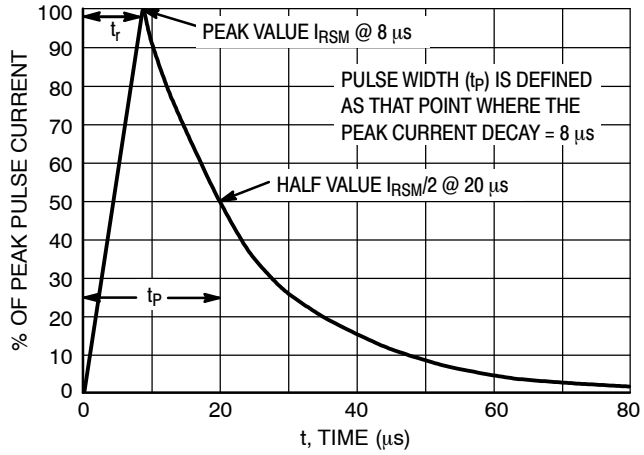

Figure 5. 8 X 20 μs Pulse Waveform

TYPICAL PERFORMANCE CURVES

(T_J = 25°C unless otherwise noted)

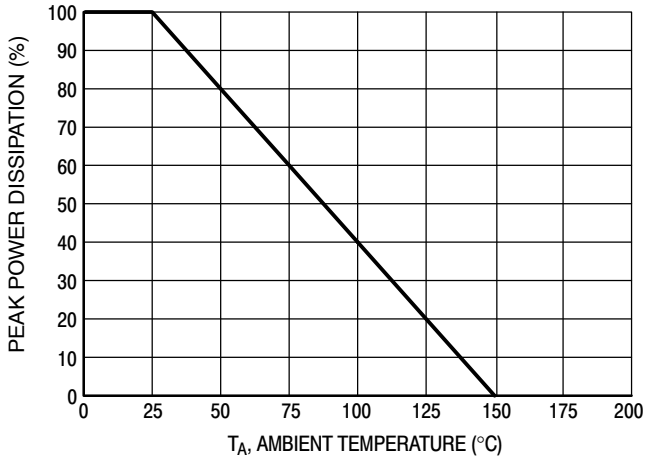

Figure 6. Pulse Derating Curve

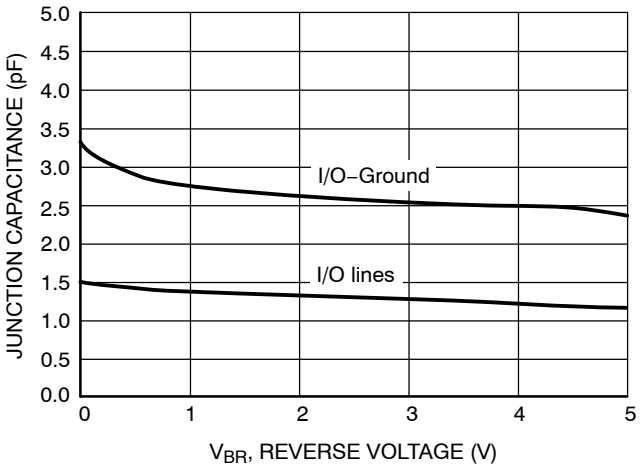

Figure 7. Junction Capacitance vs Reverse Voltage

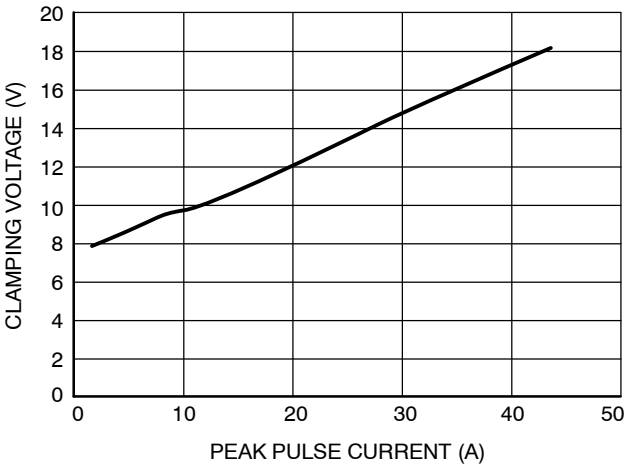

Figure 8. Clamping Voltage vs. Peak Pulse Current (8 x 20 μs Waveform)

APPLICATIONS INFORMATION

The new NUP4201MR6 is a low capacitance TVS diode array designed to protect sensitive electronics such as communications systems, computers, and computer peripherals against damage due to ESD events or transient overvoltage conditions. Because of its low capacitance, it can be used in high speed I/O data lines. The integrated design of the NUP4201MR6 offers surge rated, low capacitance steering diodes and a TVS diode integrated in a single package (TSOP−6). If a transient condition occurs, the steering diodes will drive the transient to the positive rail of the power supply or to ground. The TVS device protects the power line against overvoltage conditions to avoid damage to the power supply and any downstream components.

NUP4201MR6 Configuration Options

The NUP4201MR6 is able to protect up to four data lines against transient overvoltage conditions by driving them to a fixed reference point for clamping purposes. The steering diodes will be forward biased whenever the voltage on the protected line exceeds the reference voltage (Vf or V_{CC} + Vf). The diodes will force the transient current to bypass the sensitive circuit.

Data lines are connected at pins 1, 3, 4 and 6. The negative reference is connected at pin 2. These pins must be connected directly to ground by using a ground plane to minimize the PCB's ground inductance. It is very important to reduce the PCB trace lengths as much as possible to minimize parasitic inductances.

Option 1

Protection of four data lines and the power supply using V_{CC} as reference.

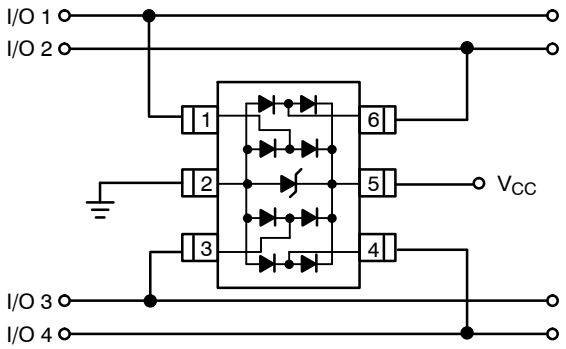

For this configuration, connect pin 5 directly to the positive supply rail (V_{CC}), the data lines are referenced to the supply voltage. The internal TVS diode prevents overvoltage on the supply rail. Biasing of the steering diodes reduces their capacitance.

Option 2

Protection of four data lines with bias and power supply isolation resistor.

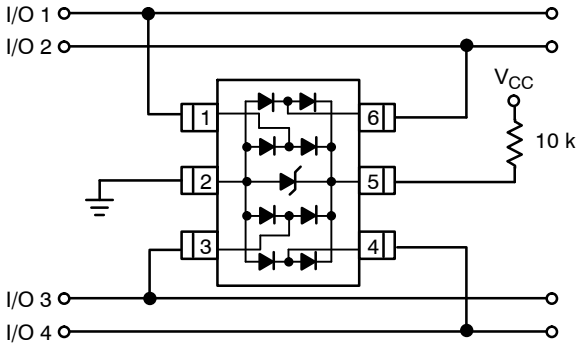

The NUP4201MR6 can be isolated from the power supply by connecting a series resistor between pin 5 and V_{CC}. A 10 kΩ resistor is recommended for this application. This will maintain a bias on the internal TVS and steering diodes, reducing their capacitance.

Option 3

Protection of four data lines using the internal TVS diode as reference.

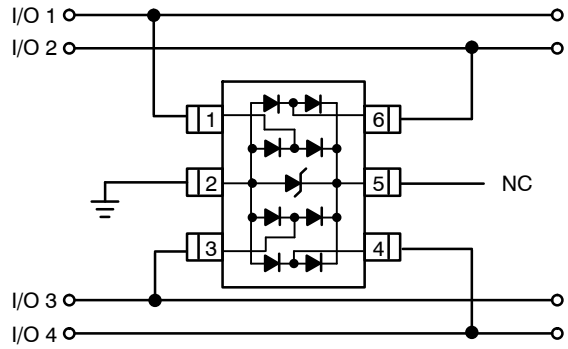

In applications lacking a positive supply reference or those cases in which a fully isolated power supply is required, the internal TVS can be used as the reference. For these applications, pin 5 is not connected. In this configuration, the steering diodes will conduct whenever the voltage on the protected line exceeds the working voltage of the TVS plus one diode drop (Vc = Vf + V_{TVS}).

ESD Protection of Power Supply Lines

When using diodes for data line protection, referencing to a supply rail provides advantages. Biasing the diodes reduces their capacitance and minimizes signal distortion. Implementing this topology with discrete devices does have disadvantages. This configuration is shown below:

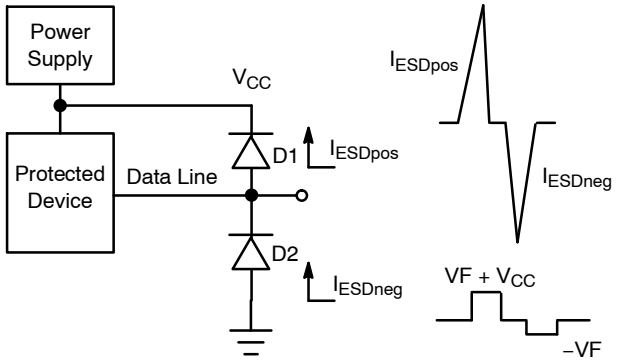

Looking at the figure above, it can be seen that when a positive ESD condition occurs, diode D1 will be forward biased while diode D2 will be forward biased when a negative ESD condition occurs. For slower transient conditions, this system may be approximated as follows:

For positive pulse conditions:

$Vc = V_{CC} + Vf_{D1}$

For negative pulse conditions:

$Vc = -Vf_{D2}$

ESD events can have rise times on the order of some number of nanoseconds. Under these conditions, the effect of parasitic inductance must be considered. A pictorial representation of this is shown below.

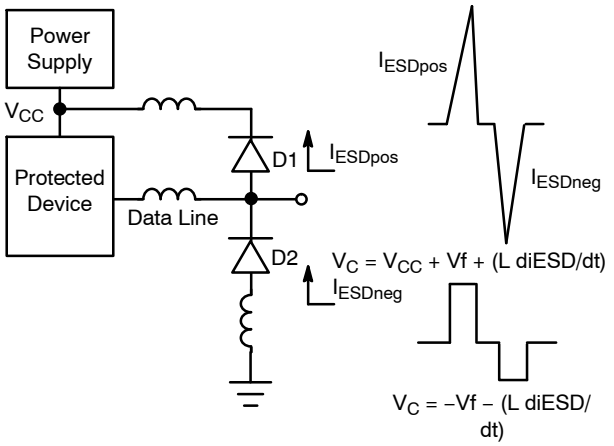

An approximation of the clamping voltage for these fast transients would be:

For positive pulse conditions:

$Vc = V_{CC} + Vf + (L\ di_{ESD}/dt)$

For negative pulse conditions:

$Vc = -Vf - (L\ di_{ESD}/dt)$

As shown in the formulas, the clamping voltage (Vc) not only depends on the Vf of the steering diodes but also on the $L\ d_{iESD}/dt$ factor. A relatively small trace inductance can result in hundreds of volts appearing on the supply rail. This endangers both the power supply and anything attached to that rail. This highlights the importance of good board layout. Taking care to minimize the effects of parasitic inductance will provide significant benefits in transient immunity.

Even with good board layout, some disadvantages are still present when discrete diodes are used to suppress ESD events across datalines and the supply rail. Discrete diodes with good transient power capability will have larger die and therefore higher capacitance. This capacitance becomes problematic as transmission frequencies increase. Reducing capacitance generally requires reducing die size. These small die will have higher forward voltage characteristics at typical ESD transient current levels. This voltage combined with the smaller die can result in device failure.

The ON Semiconductor NUP4201MR6 was developed to overcome the disadvantages encountered when using discrete diodes for ESD protection. This device integrates a TVS diode within a network of steering diodes.

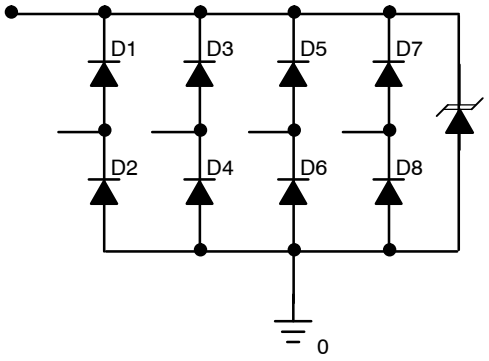

Figure 9. NUP4201MR6 Equivalent Circuit

During an ESD condition, the ESD current will be driven to ground through the TVS diode as shown below.

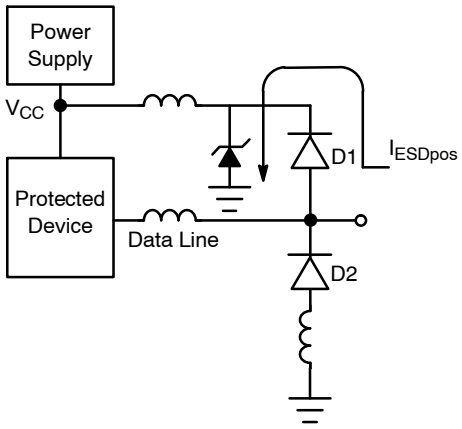

The resulting clamping voltage on the protected IC will be:

$Vc = VF + V_{TVS}$.

The clamping voltage of the TVS diode is provided in Figure 8 and depends on the magnitude of the ESD current. The steering diodes are fast switching devices with unique forward voltage and low capacitance characteristics.

TYPICAL APPLICATIONS

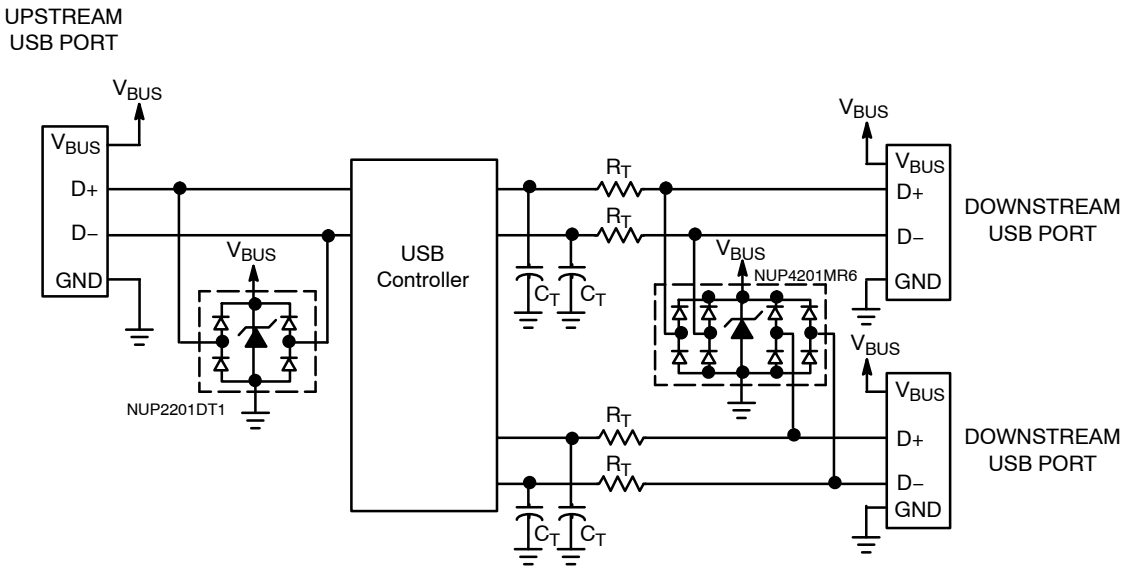

Figure 10. ESD Protection for USB Port

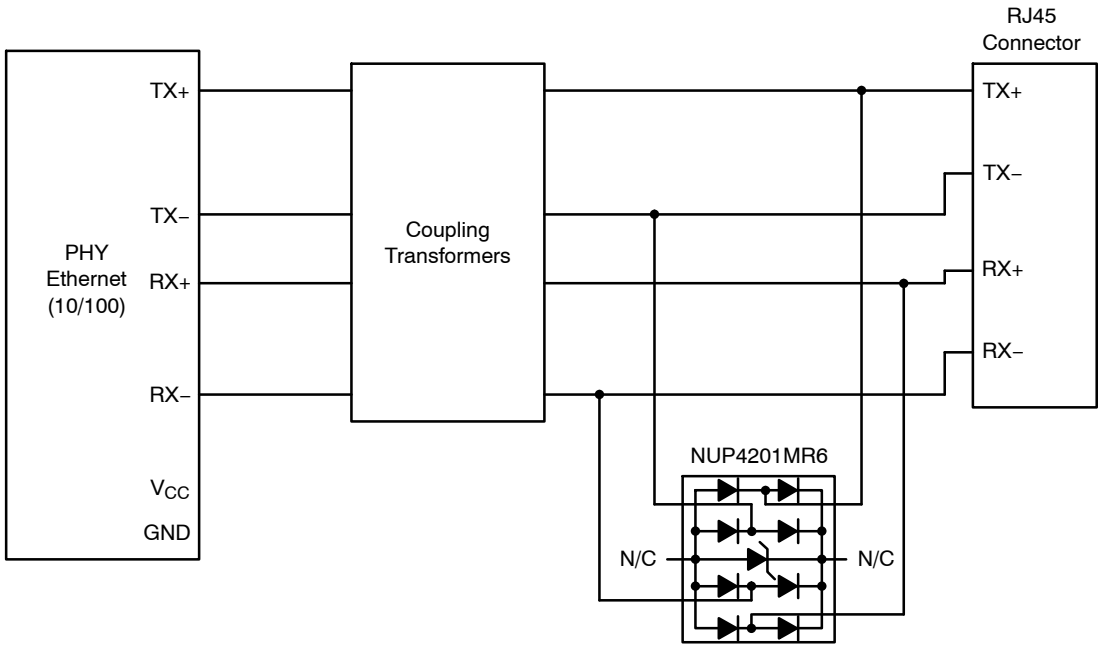

Figure 11. Protection for Ethernet 10/100 (Differential mode)

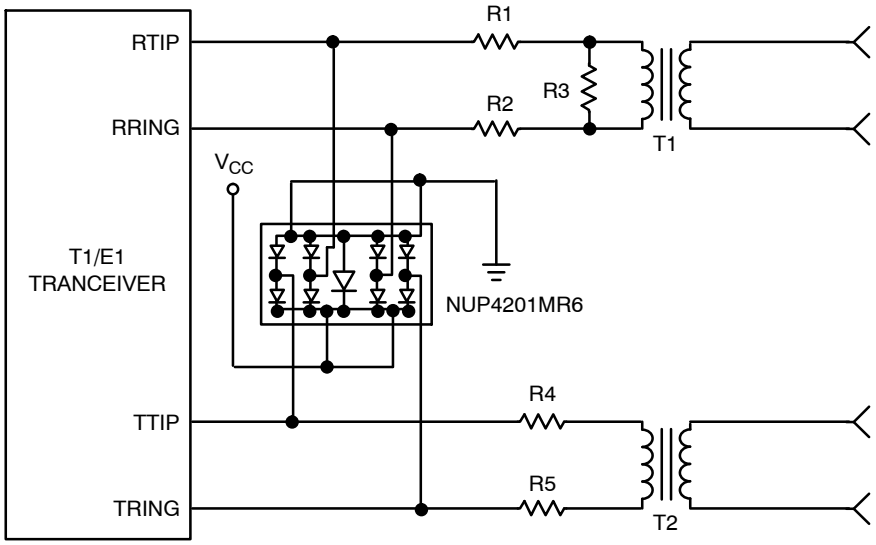

Figure 12. TI/E1 Interface Protection

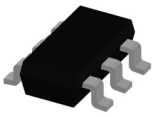

TSOP−6 3.00x1.50x0.90, 0.95P
CASE 318G
ISSUE W

DATE 26 FEB 2024

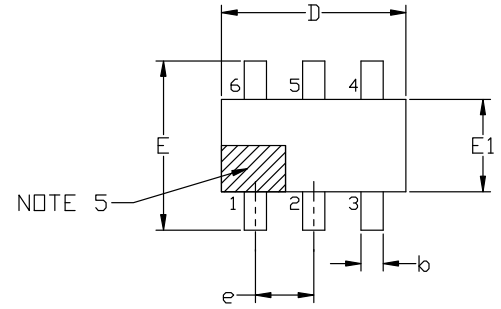

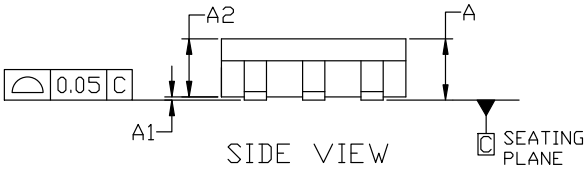

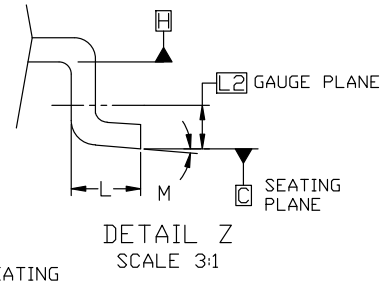

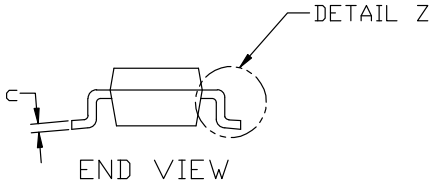

NOTES:
1. DIMENSIONING AND TOLERANCING PER ASME Y14.5M, 2018.
2. CONTROLLING DIMENSION: MILLIMETERS.
3. MAXIMUM LEAD THICKNESS INCLUDES LEAD FINISH. MINIMUM LEAD THICKNESS IS THE MINIMUM THICKNESS OF BASE MATERIAL.
4. DIMENSIONS D AND E1 DO NOT INCLUDE MOLD FLASH, PROTRUSIONS, OR GATE BURRS. MOLD FLASH, PROTRUSIONS, OR GATE BURRS SHALL NOT EXCEED 0.15 PER SIDE. DIMENSIONS D AND E1 ARE DETERMINED AT DATUM H.
5. PIN 1 INDICATOR MUST BE LOCATED IN THE INDICATED ZONE

MILLIMETERS			
DIM	MIN	NOM	MAX
A	0.90	1.00	1.10
A1	0.01	0.06	0.10
A2	0.80	0.90	1.00
b	0.25	0.38	0.50
c	0.10	0.18	0.26
D	2.90	3.00	3.10
E	2.50	2.75	3.00
E1	1.30	1.50	1.70
e	0.85	0.95	1.05
L	0.20	0.40	0.60
L2	0.25 BSC		
M	0°	---	10°

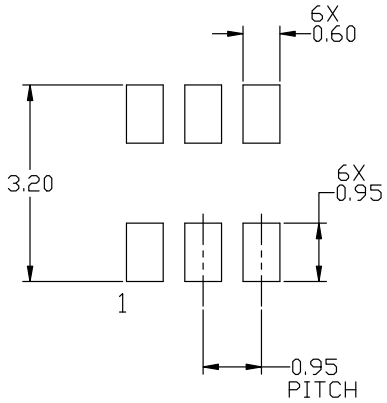

RECOMMENDED MOUNTING FOOTPRINT

*For additional information on our Pb-Free strategy and soldering details, please download th e ON Semiconductor Soldering and Mounting Techniques Reference manual, SOLDERRM/D.

onsemi and ONSEMI are trademarks of Semiconductor Components Industries, LLC dba **onsemi** or its subsidiaries in the United States and/or other countries. **onsemi** reserves the right to make changes without further notice to any products herein. **onsemi** makes no warranty, representation or guarantee regarding the suitability of its products for any particular purpose, nor does **onsemi** assume any liability arising out of the application or use of any product or circuit, and specifically disclaims any and all liability, including without limitation special, consequential or incidental damages. **onsemi** does not convey any license under its patent rights nor the rights of others.

© Semiconductor Components Industries, LLC, 2019

TSOP−6 3.00x1.50x0.90, 0.95P
CASE 318G
ISSUE W

DATE 26 FEB 2024

GENERIC MARKING DIAGRAM*

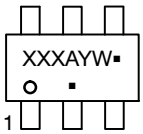

IC

XXX = Specific Device Code
A = Assembly Location
Y = Year
W = Work Week
▪ = Pb−Free Package

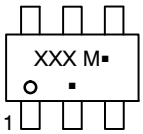

STANDARD

XXX = Specific Device Code
M = Date Code
▪ = Pb−Free Package

*This information is generic. Please refer to device data sheet for actual part marking. Pb−Free indicator, “G” or microdot “▪”, may or may not be present. Some products may not follow the Generic Marking.

STYLE 1:
PIN 1. DRAIN
2. DRAIN
3. GATE
4. SOURCE
5. DRAIN
6. DRAIN

STYLE 2:
PIN 1. EMITTER 2
2. BASE 1
3. COLLECTOR 1
4. EMITTER 1
5. BASE 2
6. COLLECTOR 2

STYLE 3:
PIN 1. ENABLE
2. N/C
3. R BOOST
4. Vz
5. V in
6. V out

STYLE 4:
PIN 1. N/C
2. V in
3. NOT USED
4. GROUND
5. ENABLE
6. LOAD

STYLE 5:
PIN 1. EMITTER 2
2. BASE 2
3. COLLECTOR 1
4. EMITTER 1
5. BASE 1
6. COLLECTOR 2

STYLE 6:
PIN 1. COLLECTOR
2. COLLECTOR
3. BASE
4. EMITTER
5. COLLECTOR
6. COLLECTOR

STYLE 7:
PIN 1. COLLECTOR
2. COLLECTOR
3. BASE
4. N/C
5. COLLECTOR
6. EMITTER

STYLE 8:
PIN 1. Vbus
2. D(in)
3. D(in)+
4. D(out)+
5. D(out)
6. GND

STYLE 9:
PIN 1. LOW VOLTAGE GATE
2. DRAIN
3. SOURCE
4. DRAIN
5. DRAIN
6. HIGH VOLTAGE GATE

STYLE 10:
PIN 1. D(OUT)+
2. GND
3. D(OUT)−
4. D(IN)−
5. VBUS
6. D(IN)+

STYLE 11:
PIN 1. SOURCE 1
2. DRAIN 2
3. DRAIN 2
4. SOURCE 2
5. GATE 1
6. DRAIN 1/GATE 2

STYLE 12:
PIN 1. I/O
2. GROUND
3. I/O
4. I/O
5. VCC
6. I/O

STYLE 13:
PIN 1. GATE 1
2. SOURCE 2
3. GATE 2
4. DRAIN 2
5. SOURCE 1
6. DRAIN 1

STYLE 14:
PIN 1. ANODE
2. SOURCE
3. GATE
4. CATHODE/DRAIN
5. CATHODE/DRAIN
6. CATHODE/DRAIN

STYLE 15:
PIN 1. ANODE
2. SOURCE
3. GATE
4. DRAIN
5. N/C
6. CATHODE

STYLE 16:
PIN 1. ANODE/CATHODE
2. BASE
3. EMITTER
4. COLLECTOR
5. ANODE
6. CATHODE

STYLE 17:
PIN 1. EMITTER
2. BASE
3. ANODE/CATHODE
4. ANODE
5. CATHODE
6. COLLECTOR

onsemi and ONSEMI are trademarks of Semiconductor Components Industries, LLC dba **onsemi** or its subsidiaries in the United States and/or other countries. **onsemi** reserves the right to make changes without further notice to any products herein. **onsemi** makes no warranty, representation or guarantee regarding the suitability of its products for any particular purpose, nor does **onsemi** assume any liability arising out of the application or use of any product or circuit, and specifically disclaims any and all liability, including without limitation special, consequential or incidental damages. **onsemi** does not convey any license under its patent rights nor the rights of others.

© Semiconductor Components Industries, LLC, 2019

onsemi, , and other names, marks, and brands are registered and/or common law trademarks of Semiconductor Components Industries, LLC dba "**onsemi**" or its affiliates and/or subsidiaries in the United States and/or other countries. **onsemi** owns the rights to a number of patents, trademarks, copyrights, trade secrets, and other intellectual property. A listing of **onsemi**'s product/patent coverage may be accessed at www.onsemi.com/site/pdf/Patent−Marking.pdf. **onsemi** reserves the right to make changes at any time to any products or information herein, without notice. The information herein is provided "as−is" and **onsemi** makes no warranty, representation or guarantee regarding the accuracy of the information, product features, availability, functionality, or suitability of its products for any particular purpose, nor does **onsemi** assume any liability arising out of the application or use of any product or circuit, and specifically disclaims any and all liability, including without limitation special, consequential or incidental damages. Buyer is responsible for its products and applications using **onsemi** products, including compliance with all laws, regulations and safety requirements or standards, regardless of any support or applications information provided by **onsemi**. "Typical" parameters which may be provided in **onsemi** data sheets and/or specifications can and do vary in different applications and actual performance may vary over time. All operating parameters, including "Typicals" must be validated for each customer application by customer's technical experts. **onsemi** does not convey any license under any of its intellectual property rights nor the rights of others. **onsemi** products are not designed, intended, or authorized for use as a critical component in life support systems or any FDA Class 3 medical devices or medical devices with a same or similar classification in a foreign jurisdiction or any devices intended for implantation in the human body. Should Buyer purchase or use **onsemi** products for any such unintended or unauthorized application, Buyer shall indemnify and hold **onsemi** and its officers, employees, subsidiaries, affiliates, and distributors harmless against all claims, costs, damages, and expenses, and reasonable attorney fees arising out of, directly or indirectly, any claim of personal injury or death associated with such unintended or unauthorized use, even if such claim alleges that **onsemi** was negligent regarding the design or manufacture of the part. **onsemi** is an Equal Opportunity/Affirmative Action Employer. This literature is subject to all applicable copyright laws and is not for resale in any manner.

ADDITIONAL INFORMATION

TECHNICAL PUBLICATIONS:
Technical Library: www.onsemi.com/design/resources/technical−documentation
onsemi Website: www.onsemi.com

ONLINE SUPPORT: www.onsemi.com/support
For additional information, please contact your local Sales Representative at www.onsemi.com/support/sales