Data sheet



C46E-1003CU400

C4000 Advanced

SAFETY LIGHT CURTAINS

SICK
Sensor Intelligence.



Illustration may differ

Ordering information

Type	part no.
C46E-1003CU400	1040208

Other models and accessories ➜ www.sick.com/C4000_Advanced

Detailed technical data

Features

Application	Normal industrial environment
System part	Receiver
Resolution	30 mm
Scanning range	21 m
Protective field height	1,050 mm
Response time	12 ms [1)]
Synchronization	Optical synchronisation

[1)] Without beam coding, without blanking, no cascaded systems. Other response times see operating instructions.

Safety-related parameters

Type	Type 4 (IEC 61496-1)
Safety integrity level	SIL 3 (IEC 61508)
Category	Category 4 (EN ISO 13849)
Performance level	PL e (EN ISO 13849)
PFH_D (mean probability of a dangerous failure per hour)	
Cascade with one guest	$43 * 10^{-9}$
T_M (mission time)	20 years (EN ISO 13849)

Functions

	Functions	Delivery status
Protective operation	✓	

[1)] In conjunction with host device.

Restart interlock	✓ [1]	External
External device monitoring (EDM)	[1]	
Beam coding	✓ [1]	Uncoded
Configurable scanning range	✓ [1]	0 m ... 6 m
Fixed blanking	✓	Deactivated
Floating blanking	✓	Deactivated
Safe SICK device communication via EFI	✓	

[1] In conjunction with host device.

Functions in combination with UE402

Bypass	✓
Operating mode switching	✓
PSDI mode	✓

Interfaces

System connection	Fixed connection cable 320 mm with male connector M12, 8-pin
Direction of cable connection	Straight
Conductor cross section	0.25 mm²
Permitted cable length	3 m [1]
Configuration method	PC with CDS (Configuration and Diagnostic Software) Via host device
Display elements	7-segment display

[1] Between host and guest.

Electrical data

Protection class	III (IEC 61140)
Supply voltage V_S	24 V DC (19.2 V ... 28.8 V) [1]
Residual ripple	≤ 10 % [2]

[1] Voltage supply via host device.
[2] Within the limits of V_S.

Mechanical data

Dimensions	See dimensional drawing
Housing cross-section	48 mm x 40 mm
Housing material	Aluminum extruded profile
Weight	2,280 g

Ambient data

Enclosure rating	IP65 (EN 60529)
Ambient operating temperature	0 °C ... +55 °C
Storage temperature	–25 °C ... +70 °C
Air humidity	15 % ... 95 %, Non-condensing
Vibration resistance	5 g, 10 Hz ... 55 Hz (EN 60068-2-6)
Shock resistance	10 g, 16 ms (EN 60068-2-27)

Other information

Wave length	850 nm

Certificates

EU declaration of conformity	✓
UK declaration of conformity	✓
ACMA declaration of conformity	✓
Moroccan declaration of conformity	✓
China-RoHS	✓
ULus approval	✓
cUL approval	✓
EC-Type-Examination approval	✓
China GB certificate	✓

Classifications

ECLASS 5.0	27272704
ECLASS 5.1.4	27272704
ECLASS 6.0	27272704
ECLASS 6.2	27272704
ECLASS 7.0	27272704
ECLASS 8.0	27272704
ECLASS 8.1	27272704
ECLASS 9.0	27272704
ECLASS 10.0	27272704
ECLASS 11.0	27272704
ECLASS 12.0	27272704
ETIM 5.0	EC002549
ETIM 6.0	EC002549
ETIM 7.0	EC002549
ETIM 8.0	EC002549
UNSPSC 16.0901	46171620

Dimensional drawing

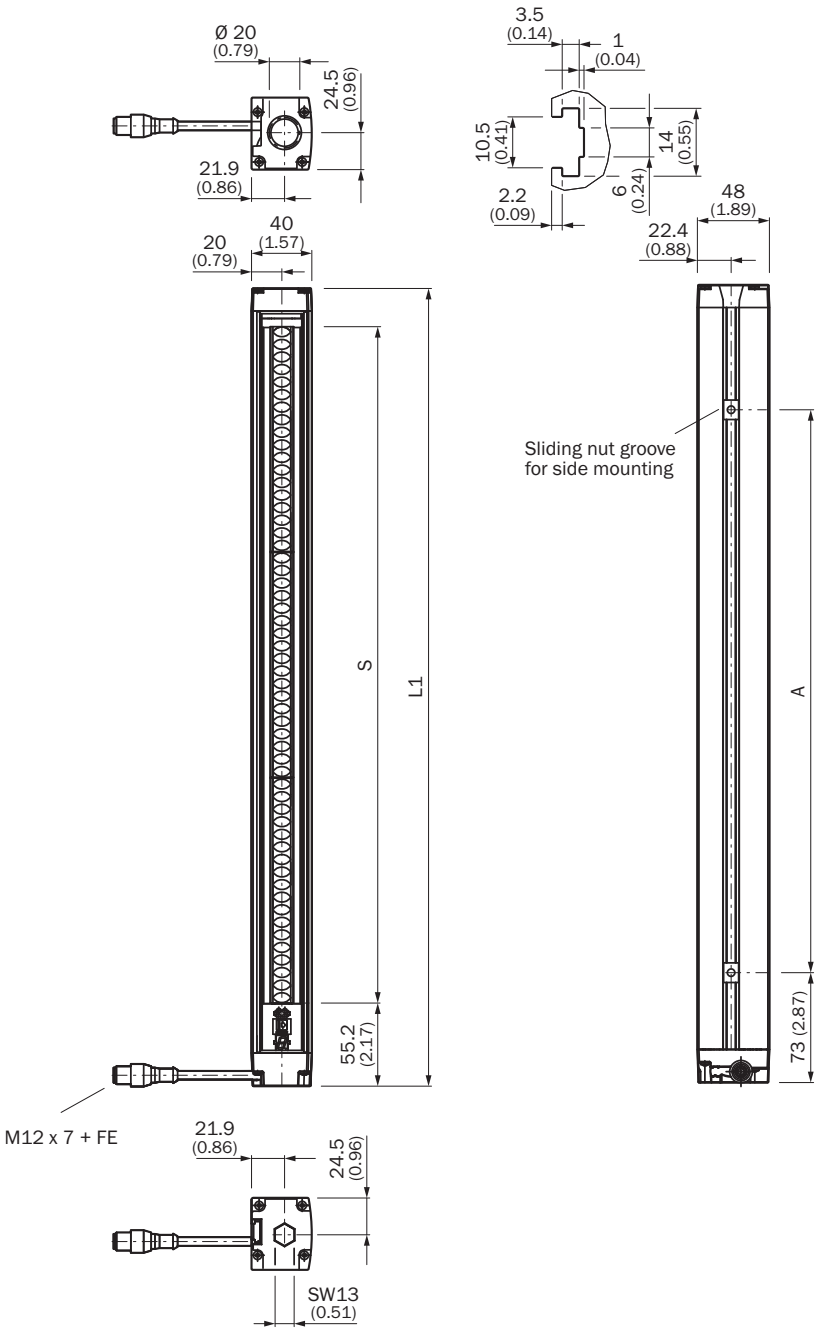

Dimensions in mm (inch)
illustration sender (receiver mirror image)

Protective field height S	L	A
150	220	76
300	380	224
450	530	374
600	680	524
750	830	674
900	981	825

Protective field height S	L	A
1.050	1.131	975
1.200	1.281	1.125
1.350	1.432	1.275
1.500	1.583	1.427
1.650	1.733	1.504
1.800	1.884	1.728

Recommended accessories

Other models and accessories ➜ www.sick.com/C4000_Advanced

	Brief description	Type	part no.
device protection and care			
	• **Product family:** Cleaning agents • **Description:** Cloth for cleaning optical surfaces	Lens cloth	4003353
Mounting systems			
	• **Description:** Mounting kit 6, side bracket, rotatable • **Material:** Zinc diecast • **Details:** Zinc diecast • **Packing unit:** 4 pieces • **Suitable for:** All protective field heights	BEF-1SHABAZN4	2019506
	• **Description:** Mounting kit 2, rotatable, swivel mount • **Material:** Plastic • **Details:** Polyamide PA6 • **Packing unit:** 4 pieces • **Suitable for:** All protective field heights	BEF-2SMMEAKU4	2019659
	• **Description:** Mounting kit 1, mounting bracket, rigid, L-shaped, including fixing screws and washers • **Packing unit:** 4 pieces • **Suitable for:** All protective field heights	BEF-3WNGBAST4	7021352
	• **Description:** Stainless steel bracket, rotatable • **Material:** Stainless steel • **Details:** Stainless steel 1.4350, stainless steel 1.4301 • **Packing unit:** 4 pieces	BEF-2SMMEAES4	2023708
	• **Description:** Omega bracket, rotatable, fixable with only one screw, for mounting on the swivel mount • **Packing unit:** 4 pieces • **Suitable for:** All protective field heights in large housing	BEF-2SMMEAAL4	2044847

	Brief description	Type	part no.
Commissioning aids and test equipment			
	• **Product:** Alignment aids • **Dimensions (W x H x L):** 19 mm 67.3 mm 66.9 mm • **Description:** Laser alignment aid for various sensors, laser class 2 (IEC 60825). Do not look into the beam!	AR60	1015741
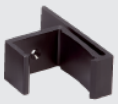	• **Product:** Alignment aids • **Description:** Adapter AR60 for housing cross-section 48 mm x 40 mm	AR60 adapter, 48x40	4032461
	• **Product:** Alignment aids • **Description:** Adapter AR60 for housing cross-section 48 mm x 40 mm in PU3H device column	AR60 adapter, 48x40, PU3H	4056731
connectors and cables			
	• **Connection type head A:** Male connector, M8, 4-pin, straight • **Connection type head B:** Male connector, USB-A, straight • **Cable:** 2 m, 4-wire, PVC • **Description:** Unshielded	DSL-8U04G02M025KM1	6034574
	• **Connection type head A:** Male connector, M8, 4-pin, straight • **Connection type head B:** Male connector, USB-A, straight • **Cable:** 10 m, 4-wire, PVC • **Description:** Unshielded	DSL-8U04G10M025KM1	6034575
	• **Connection type head A:** Female connector, M12, 8-pin, straight • **Connection type head B:** Male connector, M12, 8-pin, straight • **Signal type:** Sensor/actuator cable • **Cable:** 1 m, 7-wire, PUR, halogen-free • **Description:** Sensor/actuator cable, shielded	DSL-127SG01ME25KM0	2076628
system plugs and extension modules			
	• **Applications:** Functionality upgrade • **Description:** Upgrades the C4000 Standard, Advanced, Palletizer, Entry/Exit, and Fusion to include the functions defined in the technical specifications, e.g., bypass, operating mode switching, and PSDI in the case of C4000 Standard, Advanced. • **Compatible sensor types:** C4000 safety light curtains	UE402	1023577

SICK AT A GLANCE

SICK is one of the leading manufacturers of intelligent sensors and sensor solutions for industrial applications. A unique range of products and services creates the perfect basis for controlling processes securely and efficiently, protecting individuals from accidents and preventing damage to the environment.

We have extensive experience in a wide range of industries and understand their processes and requirements. With intelligent sensors, we can deliver exactly what our customers need. In application centers in Europe, Asia and North America, system solutions are tested and optimized in accordance with customer specifications. All this makes us a reliable supplier and development partner.

Comprehensive services complete our offering: SICK LifeTime Services provide support throughout the machine life cycle and ensure safety and productivity.

For us, that is “Sensor Intelligence.”

WORLDWIDE PRESENCE:

Contacts and other locations –www.sick.com