ME 17,5 UTG/FE KMGY - Mounting base housing

2202704

https://www.phoenixcontact.com/us/products/2202704

Please be informed that the data shown in this PDF document is generated from our online catalog. Please find the complete data in the user documentation. Our general terms of use for downloads are valid.



DIN rail housing, Lower housing part with metal foot catch, with FE contact, tall design, without vents, width: 17.6 mm, height: 99 mm, depth: 107.3 mm, color: light grey (similar RAL 7035), cross connection: without bus connector, number of positions cross connector: not relevant

Your advantages

- Tool-free mounting
- Available in overall widths from 12.5 mm to 90 mm, modular extension possible
- Flammability rating V0 in accordance with UL 94
- Variety of connection technology
- Can be mounted on the DIN rail
- With integrated or DIN-rail-mountable bus connector as an option

Commercial data

Item number	2202704
Packing unit	10 pc
Minimum order quantity	10 pc
Note	Made to order (non-returnable)
Sales key	AC08
Product key	ACHAAA
GTIN	4055626170305
Weight per piece (including packing)	42.47 g
Weight per piece (excluding packing)	42.47 g
Customs tariff number	85389099
Country of origin	DE

Technical data

Notes

General	Refer to the data sheet for the range in the download area.

Product properties

Product type	Enclosure bottom part
Housing type	DIN rail housing
Housing series	ME
Product family	ME 17,5..
Number of positions	12
Max. number of positions	0)
Type	Lower housing part with metal foot catch, with FE contact, tall design
Ventilation openings present	no

Dimensions

Dimensional drawing	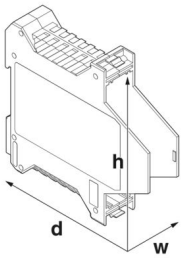
Width	17.6 mm
Height	99 mm
Depth	107.3 mm
Depth from top edge of DIN rail	100.7 mm
Depth from top edge of DIN rail to support point on upper part	68.5 mm

PCB design

PCB thickness	1.4 mm ... 1.8 mm

Material specifications

Color (Housing)	light grey (RAL 7035)
Flammability rating according to UL 94	V0
CTI according to IEC 60112	600
Housing material	Polyamide
Surface characteristics	untreated

Environmental and real-life conditions

Power dissipation single housing for 20 °C

Ambient temperature	20 °C

Reduction factor	1
Mounting position	vertical
Power dissipation	4.9 W

Power dissipation single housing for 30 °C

Ambient temperature	30 °C
Reduction factor	0.91
Mounting position	vertical
Power dissipation	4.5 W

Power dissipation single housing for 40 °C

Ambient temperature	40 °C
Reduction factor	0.81
Mounting position	vertical
Power dissipation	4 W

Power dissipation single housing for 50 °C

Ambient temperature	50 °C
Reduction factor	0.7
Mounting position	vertical
Power dissipation	3.4 W

Power dissipation single housing for 60 °C

Ambient temperature	60 °C
Reduction factor	0.57
Mounting position	vertical
Power dissipation	2.8 W

Power dissipation single housing for 70 °C

Ambient temperature	70 °C
Reduction factor	0.49
Mounting position	vertical
Power dissipation	2.4 W

Vibration test

Specification	IEC 60068-2-6:2007-12
Frequency	10 - 150 - 10 Hz
Sweep speed	1 octave/min
Amplitude	0.15 mm (10 Hz ... 58.1 Hz)
Acceleration	2g (58.1 Hz ... 150 Hz)
Test duration per axis	2.5 h
Test directions	X-, Y- and Z-axis

Glow-wire test

Specification	IEC 60695-2-11:2014-02
Temperature	850 °C
Time of exposure	30 s

Thermal stability / ball thrust test

Specification	IEC 60695-10-2:2014-02
Temperature	125 °C
Test duration	1 h
Force	20 N

Mechanical strength / tumbling barrel

Specification	IEC 60998-1:2002-12
Height of fall	50 cm
Frequency	10

Shocks

Specification	IEC 60068-2-27:2008-02
Pulse shape	Half-sine
Acceleration	15g
Shock duration	11 ms
Number of shocks per direction	3
Test directions	X-, Y- and Z-axis (pos. and neg.)

Degree of protection (IP code)

Specification	IEC 60529:1989-11 + AMD 1:1999-11 + AMD 2:2013-08

Ambient conditions

Max. IP code to attain	IP20
Ambient temperature (operation)	-40 °C ... 105 °C (depending on power dissipation)
Ambient temperature (storage/transport)	-40 °C ... 55 °C
Ambient temperature (assembly)	-5 °C ... 100 °C
Relative humidity (storage/transport)	80 %

PCB data

Number of PCB holders	1
Type of PCB mount	Insertion (optional latching by PCB stop)
Thickness of the PCB	1.4 mm ... 1.8 mm

Mounting

Mounting type	DIN rail mounting
Mounting position	Vertical (horizontal DIN rail)

Packaging specifications

Type of packaging	packed in cardboard
Outer packaging type	Carton

Drawings

Dimensional drawing

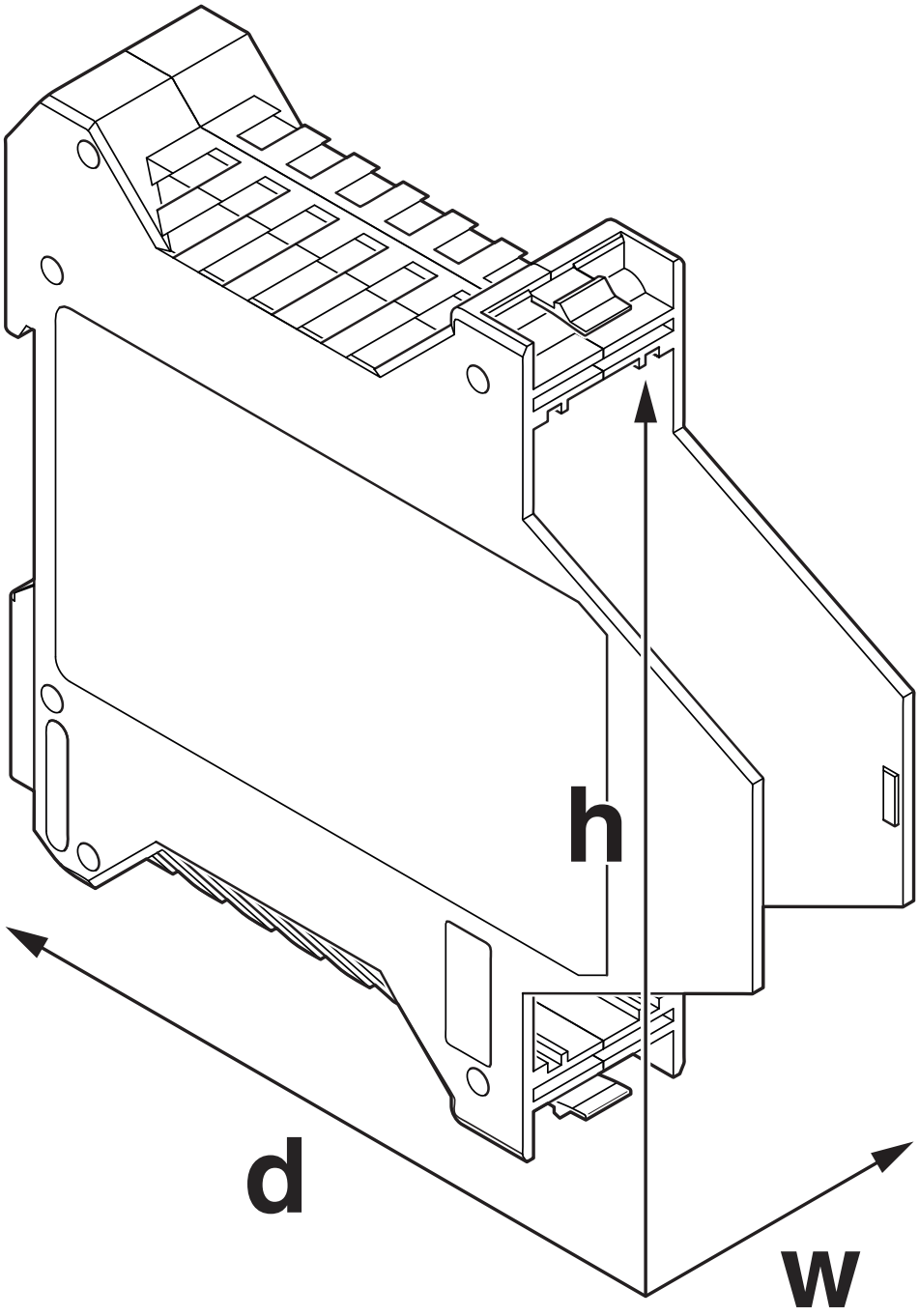

Schematic figure for illustrating the item dimensions. The figure is not of the desired product. For further details, refer to the product drawings in the “Downloads” tab.

Approvals

To download certificates, visit the product detail page: https://www.phoenixcontact.com/us/products/2202704

UL Recognized
Approval ID: FILE E 240868

Classifications

ECLASS

ECLASS-11.0	27182702
ECLASS-13.0	27190601

ETIM

ETIM 8.0	EC001031

UNSPSC

UNSPSC 21.0	31261500

Environmental product compliance

EU RoHS

Fulfills EU RoHS substance requirements	Yes, No exemptions

China RoHS

Environment friendly use period (EFUP)	EFUP-E
	No hazardous substances above the limits

EU REACH SVHC

REACH candidate substance (CAS No.)	No substance above 0.1 wt%

Mandatory accessories

ME 17,5 OT-FKDSO KMGY - Upper housing part

2200322

https://www.phoenixcontact.com/us/products/2200322



DIN rail housing, Upper housing part for PCB terminal blocks with Push-in spring connection, width: 17.6 mm, height: 99 mm, depth: 45.85 mm, color: light grey (similar RAL 7035)

ME 17,5 OT-MSTBO KMGY - Upper housing part

2853747

https://www.phoenixcontact.com/us/products/2853747



DIN rail housing, Upper housing part for connectors with header, width: 17.6 mm, height: 99 mm, depth: 45.85 mm, color: light grey (similar RAL 7035)

ME 17,5 OTU-MKDSO KMGY - Upper housing part

2278940

https://www.phoenixcontact.com/us/products/2278940



DIN rail housing, Upper housing part for PCB terminal blocks with screw connection, width: 17.6 mm, height: 99 mm, depth: 45.85 mm, color: light grey (similar RAL 7035)

ME 17,5 OTP-MSTBO PS KMGY - Upper housing part

2279253

https://www.phoenixcontact.com/us/products/2279253



DIN rail housing, Upper housing part for connectors with header, width: 17.6 mm, height: 99 mm, depth: 45.85 mm, color: light grey (similar RAL 7035)

Accessories

ME LPZS - PCB stop

2906911

https://www.phoenixcontact.com/us/products/2906911



DIN rail housing, after approx. 4 cm, the ME LPZS PCB pull-out stop prevents the PCB from being removed completely and locks the PCB in place

EML (44X76)R-ME - Label for ME ... UT ... housing

0828130

https://www.phoenixcontact.com/us/products/0828130



Label for ME ... UT ... housing, Roll, white, unlabeled, can be labeled with: THERMOMARK ROLLMASTER 300/600, THERMOMARK X1.2, THERMOMARK ROLL X1, THERMOMARK ROLL 2.0, THERMOMARK ROLL, mounting type: adhesive, lettering field size: 44 x 76 mm, Number of individual labels: 200

Phoenix Contact 2024 © - all rights reserved
https://www.phoenixcontact.com

Phoenix Contact USA
586 Fulling Mill Road
Middletown, PA 17057, United States
(+717) 944-1300
info@phoenixcon.com