PEG127HB3360QE4

PEG127, Aluminum Electrolytic, 360 uF, -10/+30%, 25 VDC, -40/+150°C

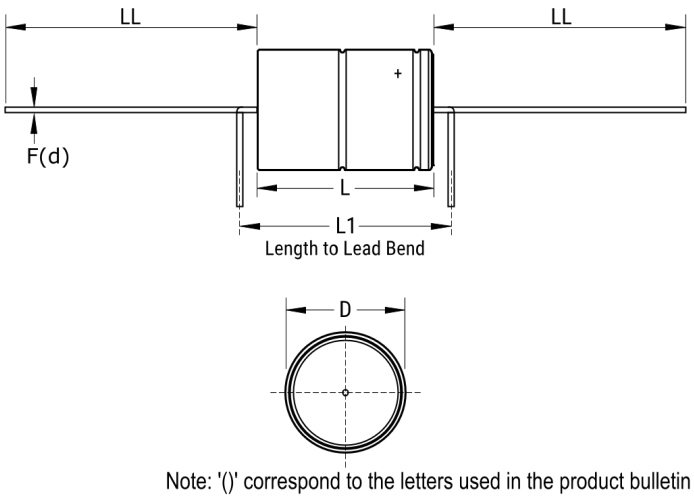

Note: '()' correspond to the letters used in the product bulletin

Click here for the 3D model.

Dimensions	
D	10mm +/-0.5mm
L	29mm +/-1mm
L1	35mm MIN
LL	42mm +3/-2mm
F	0.8mm +/-0.03mm

Packaging Specifications	
Sleeving	Yes
Packaging	Tray

General Information	
Series	PEG127
Dielectric	Aluminum Electrolytic
Style	Axial
Description	Vibration Resistant High Ripple Axial Aluminum Electrolytic
RoHS	Yes
Lead	Wire Leads
Qualifications	AEC-Q200
AEC-Q200	Yes
Halogen Free	Yes
Typical Component Weight	4 g
Notes	L1 is KEMETs recommendation for minimum distance between symmetrical Lead bend. Available only for Customer specific part numbers. Lead bend dimensions must be specified and confirmed per article. Dimensions D And L Include Sleeving.
Shelf Life	520 Weeks

Specifications	
Capacitance	360 uF
Capacitance Tolerance	-10/+30%
Voltage DC	25 VDC
Temperature Range	-40/+150°C
Rated Temperature	150°C
Life	1600 Hrs
ESR	281 mOhms (100Hz 20C), 130 mOhms (100kHz 20C), 43 mOhms (5-100kHz 150C)
Ripple Current	3.5 Amps (5kHz 100C), 2.5 Amps (5kHz 125C), 1.6 Amps (5kHz 140C), 0.71 Amps (5kHz 150C)
Leakage Current	31 uA (5min 20°C)

Statements of suitability for certain applications are based on our knowledge of typical operating conditions for such applications, but are not intended to constitute - and we specifically disclaim - any warranty concerning suitability for a specific customer application or use. This Information is intended for use only by customers who have the requisite experience and capability to determine the correct products for their application. Any technical advice inferred from this Information or otherwise provided by us with reference to the use of our products is given gratis, and we assume no obligation or liability for the advice given or results obtained.

© 2006 - 2024 KEMET