Data sheet

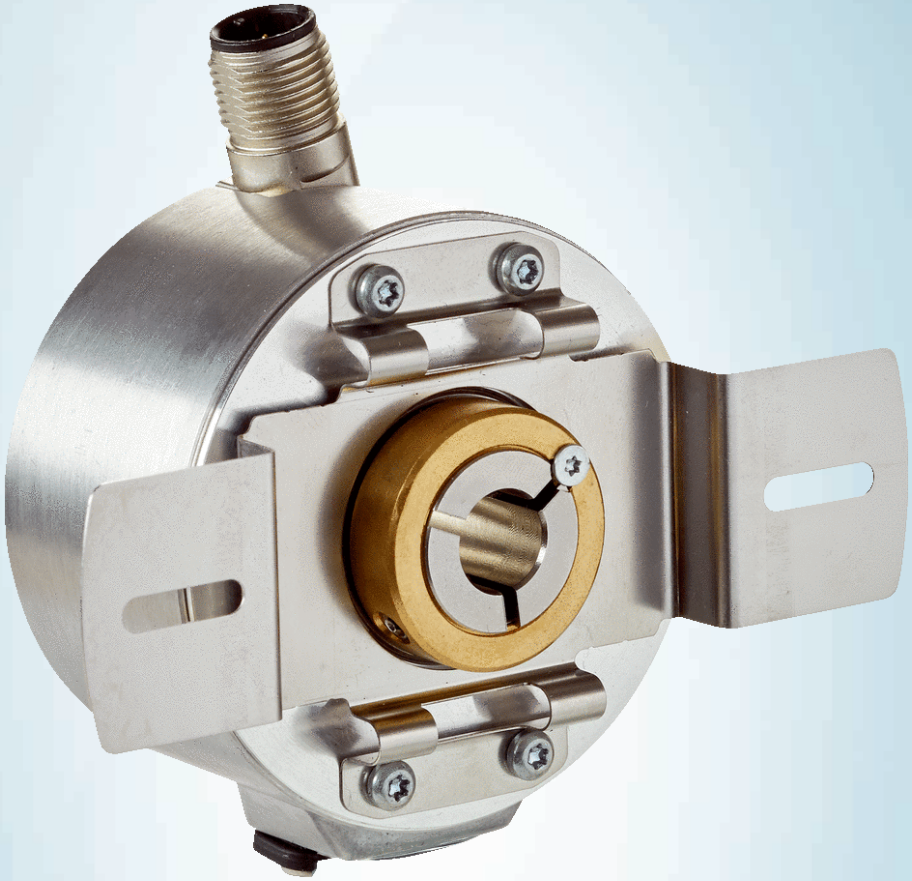

DUS60E-TFKC0ADA

DUS60

INCREMENTAL ENCODERS

SICK
Sensor Intelligence.

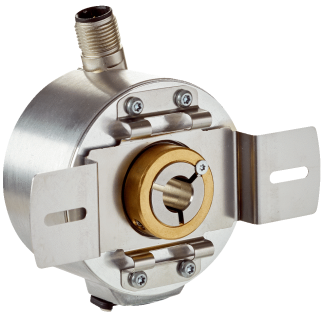

Illustration may differ

Ordering information

Type	part no.
DUS60E-TFKC0ADA	1087210

Other models and accessories ➜ www.sick.com/DUS60

Detailed technical data

Safety-related parameters

$MTTF_D$ (mean time to dangerous failure)	275 years (EN ISO 13849-1) [1]

[1] This product is a standard product and does not constitute a safety component as defined in the Machinery Directive. Calculation based on nominal load of components, average ambient temperature 40 °C, frequency of use 8760 h/a. All electronic failures are considered hazardous. For more information, see document no. 8015532.

Performance

Measuring step	90°, electric/pulses per revolution
Measuring step deviation	± 18° / pulses per revolution
Error limits	Measuring step deviation x 3
Duty cycle	≤ 0.5 ± 5 %

Interfaces

Communication interface	Incremental
Communication Interface detail	TTL / HTL [1]
Number of signal channels	6-channel
Programmable/configurable	✓
Parameterising data	DIP switch, selectable output
Output function	A and B output
Initialization time	< 5 ms [2]
Output frequency	+ 60 kHz
Load current	≤ 30 mA, per channel
Operating current	≤ 120 mA (without load)
Power consumption	≤ 1.25 W (without load)
DIP switch parameters	
Pulses per revolution	✓

[1] The output is not selectable for DIP switch configurations E, F, and G. The output voltage value is dependent on the supply voltage.

[2] Valid positional data can be read once this time has elapsed.

Output voltage	✓
Direction of rotation	✓
Configuration switches	1500 PPR values, direction selection, TTL/HTL selectable

[1] The output is not selectable for DIP switch configurations E, F, and G. The output voltage value is dependent on the supply voltage.
[2] Valid positional data can be read once this time has elapsed.

Electronics

Connection type	Male connector, M12, 8-pin, universal [1]
Supply voltage	4.75 ... 30 V
Reference signal, number	1
Reference signal, position	180°, electric, gated with A
Reverse polarity protection	✓
Short-circuit protection of the outputs	✓

[1] The universal connection is rotatable so that it is possible to position the conector in the radial or axial direction.

Mechanics

Mechanical design	Through hollow shaft
Shaft diameter	1/2"Front clamp
Flange type / stator coupling	2-point stator coupling, slot, hole diameter 63 mm – 83 mm
Weight	0.25 kg [1]
Shaft material	Stainless steel
Flange material	Aluminum
Housing material	Aluminum
Material, cable	PVC
Start up torque	0.5 Ncm (+20 °C)
Operating torque	0.4 Ncm (+20 °C)
Permissible movement static	± 0.3 mm (radial) ± 0.5 mm (axial)
Permissible movement dynamic	± 0.1 mm (radial) ± 0.2 mm (axial)
Operating speed	1,500 min^{-1}
Moment of inertia of the rotor	50 gcm^2
Bearing lifetime	3.6 x 10^9 revolutions
Angular acceleration	≤ 500,000 rad/s^2

[1] Based on encoder with male connector.

Ambient data

EMC	According to EN 61000-6-2 and EN 61000-6-3
Enclosure rating	IP65 [1]
Permissible relative humidity	90 % (Condensation not permitted)
Operating temperature range	–30 °C ... +90 °C
Storage temperature range	–40 °C ... +75 °C

[1] When the mating connector is installed and the DIP switch door is sealed with the encoder housing.

Resistance to shocks	100 g (EN 60068-2-27)
Resistance to vibration	30 g, 10 Hz ... 2,000 Hz (EN 60068-2-6)

[1] When the mating connector is installed and the DIP switch door is sealed with the encoder housing.

Classifications

ECLASS 5.0	27270501
ECLASS 5.1.4	27270501
ECLASS 6.0	27270590
ECLASS 6.2	27270590
ECLASS 7.0	27270501
ECLASS 8.0	27270501
ECLASS 8.1	27270501
ECLASS 9.0	27270501
ECLASS 10.0	27270501
ECLASS 11.0	27270501
ECLASS 12.0	27270501
ETIM 5.0	EC001486
ETIM 6.0	EC001486
ETIM 7.0	EC001486
ETIM 8.0	EC001486
UNSPSC 16.0901	41112113

Certificates

EU declaration of conformity	✓
UK declaration of conformity	✓
ACMA declaration of conformity	✓
China-RoHS	✓
cULus certificate	✓

Dimensional drawing Through hollow shaft with front clamping

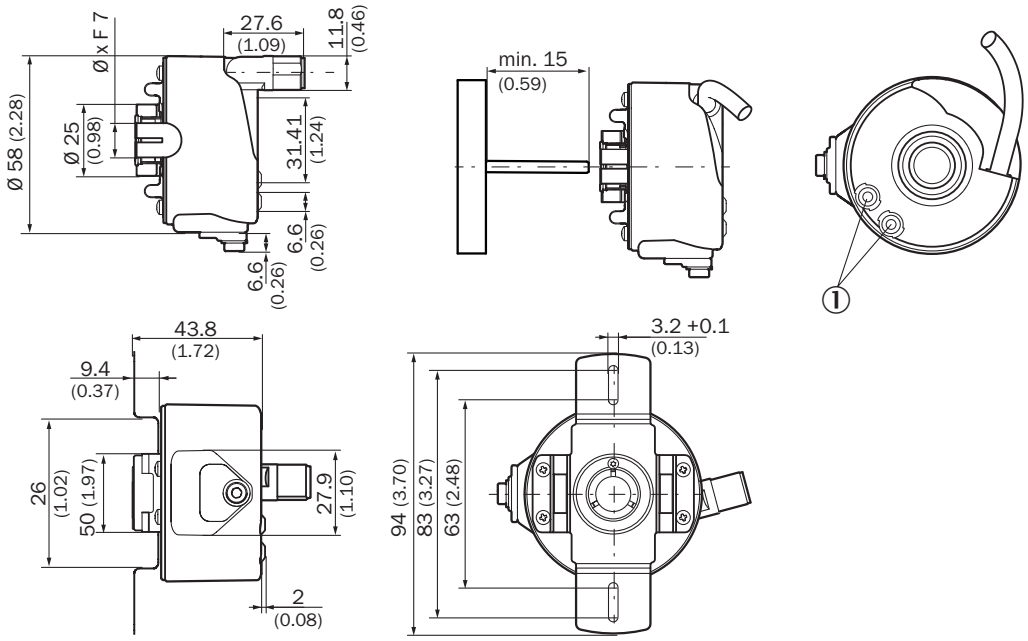

Dimensions in mm (inch)
① Status indicators

PIN assignment View of M12 male device connector on encoder

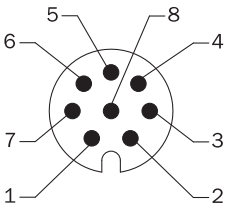

Wire colors (cable connection)	Male connector M12, 4-pin	Male connector M12, 8-pin	Output function				Explanation
			A	B	C	D	
Brown	-	1	A-	CW-	A-	A-	Signal
White	4	2	A	CW	A	A	Signal
Black	-	3	B-	CCW-	Direction-	B-	Signal
Pink	2	4	B	CCW	Direction	Fault (M12, 4-pin)B (M12, 8-pin and cable connection)	Signal
Yellow	-	5	Z-	Fault-	Fault-	Fault-	Signal
Violet	-	6	Z	Fault	Fault	Fault	Signal
Blue	3	7	GND	GND	GND	GND	Ground connection
Red	1	8	U_S	U_S	U_S	U_S	Supply voltage
-	-	-	Case	Case	Case	Case	Earth fault protection
Shielding	-	-	Shielding	Shielding	Shielding	Shielding	Shielding

Adjustments

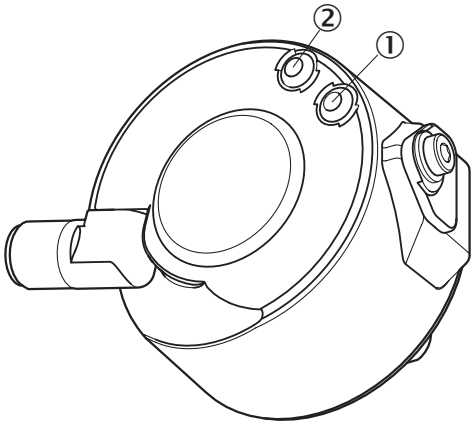

	DIP switch configuration D – 1500 pulses				
Pulses per revolution	1	5	15	75	1500
	2	6	20	100	–
	3	10	30	150	–
	4	12	60	300	–

Recommended accessories

Other models and accessories ➜ www.sick.com/DUS60

	Brief description	Type	part no.
connectors and cables			
	• **Connection type head A:** Female connector, M12, 8-pin, straight • **Connection type head B:** Flying leads • **Signal type:** Incremental, SSI • **Cable:** 2 m, 8-wire, PUR, halogen-free • **Description:** Incremental, shieldedSSI • **Connection systems:** Flying leads	DOL-1208-G02MAC1	6032866
	• **Connection type head A:** Female connector, M12, 8-pin, straight • **Connection type head B:** Flying leads • **Signal type:** Incremental, SSI • **Cable:** 5 m, 8-wire, PUR, halogen-free • **Description:** Incremental, shieldedSSI • **Connection systems:** Flying leads	DOL-1208-G05MAC1	6032867
	• **Connection type head A:** Female connector, M12, 8-pin, straight • **Connection type head B:** Flying leads • **Signal type:** Incremental, SSI • **Cable:** 10 m, 8-wire, PUR, halogen-free • **Description:** Incremental, shieldedSSI • **Connection systems:** Flying leads	DOL-1208-G10MAC1	6032868
	• **Connection type head A:** Female connector, M12, 8-pin, straight • **Connection type head B:** Flying leads • **Signal type:** Incremental, SSI • **Cable:** 20 m, 8-wire, PUR, halogen-free • **Description:** Incremental, shieldedSSI • **Connection systems:** Flying leads	DOL-1208-G20MAC1	6032869
	• **Connection type head A:** Female connector, M12, 8-pin, straight, A-coded • **Signal type:** Incremental, SSI • **Cable:** CAT5, CAT5e • **Description:** Incremental, shieldedSSI • **Connection systems:** IDC quick connection • **Permitted cross-section:** 0.14 mm² ... 0.34 mm²	DOS-1208-GA01	6045001
	• **Connection type head A:** Female connector, M12, 8-pin, angled • **Connection type head B:** Flying leads • **Signal type:** HIPERFACE®, Incremental • **Cable:** 2 m, 8-wire, PUR, halogen-free • **Description:** HIPERFACE®, shieldedIncremental	DOL-1208-W02MAC1	6037724
	• **Connection type head A:** Female connector, M12, 8-pin, angled • **Connection type head B:** Flying leads • **Signal type:** HIPERFACE®, Incremental • **Cable:** 5 m, 8-wire, PUR, halogen-free • **Description:** HIPERFACE®, shieldedIncremental	DOL-1208-W05MAC1	6037725
	• **Connection type head A:** Female connector, M12, 8-pin, angled • **Connection type head B:** Flying leads • **Signal type:** HIPERFACE®, Incremental • **Cable:** 10 m, 8-wire, PUR, halogen-free • **Description:** HIPERFACE®, shieldedIncremental	DOL-1208-W10MAC1	6037726
	• **Connection type head A:** Female connector, M12, 8-pin, angled • **Connection type head B:** Flying leads • **Signal type:** HIPERFACE®, Incremental • **Cable:** 20 m, 8-wire, PUR • **Description:** HIPERFACE®, shieldedIncremental	DOL-1208-W20MAC1	6037727
	• **Connection type head A:** Female connector, M12, 8-pin, angled • **Connection type head B:** Flying leads • **Cable:** 2 m, 8-wire, PVC • **Description:** Shielded • **Connection systems:** Flying leads	DOL-1208-W02MA	6020992
	• **Connection type head A:** Female connector, M12, 8-pin, angled • **Connection type head B:** Flying leads • **Signal type:** Sensor/actuator cable • **Cable:** 2 m, 8-wire, PUR, halogen-free • **Description:** Sensor/actuator cable, shielded	DOL-1208-W02MAS01	6029224

	Brief description	Type	part no.
	• **Connection systems:** Flying leads		
	• **Connection type head A:** Female connector, M12, 8-pin, angled • **Connection type head B:** Flying leads • **Cable:** 2 m, 8-wire, PUR, halogen-free • **Description:** Unshielded	DOL-1208-W02MC	6035623
	• **Connection type head A:** Female connector, M12, 8-pin, angled • **Connection type head B:** Flying leads • **Cable:** 5 m, 8-wire, PVC • **Description:** Shielded • **Connection systems:** Flying leads	DOL-1208-W05MA	6021033
	• **Connection type head A:** Female connector, M12, 8-pin, angled • **Connection type head B:** Flying leads • **Cable:** 5 m, 8-wire, PUR • **Description:** Unshielded	DOL-1208-W05MC	6035624
	• **Connection type head A:** Female connector, M12, 8-pin, angled • **Connection type head B:** Flying leads • **Cable:** 10 m, 8-wire, PUR, halogen-free • **Description:** Unshielded	DOL-1208-W10MC	6035625

SICK AT A GLANCE

SICK is one of the leading manufacturers of intelligent sensors and sensor solutions for industrial applications. A unique range of products and services creates the perfect basis for controlling processes securely and efficiently, protecting individuals from accidents and preventing damage to the environment.

We have extensive experience in a wide range of industries and understand their processes and requirements. With intelligent sensors, we can deliver exactly what our customers need. In application centers in Europe, Asia and North America, system solutions are tested and optimized in accordance with customer specifications. All this makes us a reliable supplier and development partner.

Comprehensive services complete our offering: SICK LifeTime Services provide support throughout the machine life cycle and ensure safety and productivity.

For us, that is “Sensor Intelligence.”

WORLDWIDE PRESENCE:

Contacts and other locations –www.sick.com