Your Expert Partner for **Human Machine Interfaces**

# Actuator

Distribution by
DigiKey

46-
2231.4FK0.000

https://digikey.eao.com/component/46-2231.4FK...

Your product:

# 46-2231.4FK0.000
# Actuator

## FRONT

| | |
|---|---|
| **Front dimension:** | Ø 35 mm |
| **Front form:** | Round |
| **Front bezel colour:** | Silver |
| **Front bezel material:** | Aluminium |

## MOUNTING

| | |
|---|---|
| **Design:** | Flush |
| **Mounting cut-out:** | Ø 30.5 mm |
| **Mounting type:** | Panel mounting |

## OPERATING-/INDICATION PART

| | |
|---|---|
| **Lens colour:** | White |
| **Lens material:** | Plastic |
| **Lens illumination:** | Illuminated |
| **Lens shape:** | Flush |
| **Lens optics:** | transparent |

## ELECTRICAL CHARACTERISTICS

| | |
|---|---|
| **Protection class:** | I |

## MECHANICAL CHARACTERISTICS

| | |
|---|---|
| **Switching action:** | Momentary |

| | |
|---|---|
| **Mechanical lifetime:** | 1 Mil. cycles of operation |
| **Tightening torque:** | 2 ... 3 Nm (17.7 ... 26.6 Lb-in) |
| **Weight:** | 0.035 kg |

## AMBIENT CONDITION

| | |
|---|---|
| **IP front protection:** | IP65 |
| **IK front protection:** | IK04 |
| **Operating temperature:** | – 25 °C ... + 55 °C |
| **Shock resistance:** | 30g, 18ms (EN-IEC 60068-2-27)<br>50g, 11ms (EN-IEC 60068-2-27) |
| **Vibration resistance:** | 5g f= 2...500Hz (EN-IEC 60068-2-6) |
| **Climate resistance:** | +25°C-97%RH / +45°C-93%RH (IEC-EN60068-2-30) |

## CERTIFICATE

| | |
|---|---|
| **Approbations:** | CSA, UL |
| **Conformities:** | CE |
| **REACH:** | REACH compliant |
| **RoHS:** | RoHS compliant |
| **Standards:** | CSA C22-2, IEC EN 60947-1, IEC EN 60947-5-1, UL508 |

## OTHER

| | |
|---|---|
| **Short Description:** | Actuator, Ø 30.5 mm, Ø 35 mm, Flush, Illuminated, White, Plastic, transparent, Round, Silver, Aluminium, Momentary, IP65, IK04 |
| **Housing colour:** | Black |
| **Housing material:** | Plastic |
| **max. number of switching elements:** | 6 |
| **Mounting cut-outs:** | |

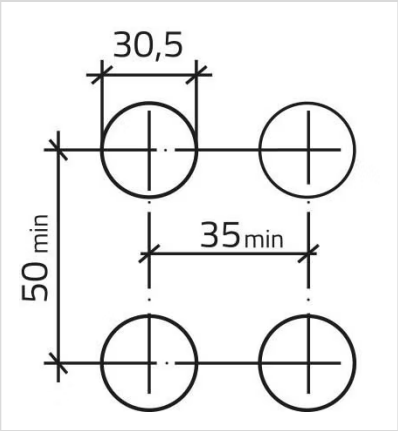

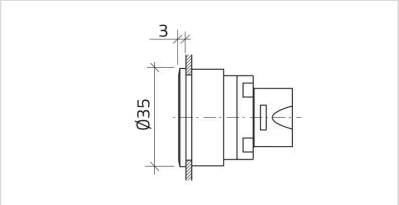
**Dimension drawings:**