EV1720DQ-3-00A

2W Mono Class D Low-EMI Audio Amplifier EV Board

DESCRIPTION

The EV1720DQ-3-00A is the evaluation board for the MP1720DQ-003, a low-power mono BTL class-D audio amplifier. MP1720DQ-003 is one of MPS' products, which is low EMI, high efficiency, and full bridge output.

The EV board can also be used to evaluate the MP1720DQ-006, MP1720DQ-009, MP1720DQ-012, and MP1720DQ-216 (with IC replacement).

ELECTRICAL SPECIFICATIONS

Parameter	Symbol	Value	Units
Supply Voltage	VIN	2.5 – 5.5	V
Gain	Av	3	dB
Maximum input signal (SE input)		3	Vpp
Maximum input signal (Differential input)		6	Vpp

FEATURES

- Pass FCC-Radiated Emissions Standards with 24inch Cable without output filter
- Maximum output into 5V VIN, 4ohm load:
  - 530mW power with 3Vpp SE input
  - 2W power with 6Vpp differential input
- Flexible Switching Frequency setting
- 2.5V~5.5V Operation from a Single Supply
- Low Noise (53μV Typical) with 3.3 V VIN
- Low Quiescent Current (4mA @3.3 V)

APPLICATIONS

- Cellular Phones
- PDAs
- MP3 Players
- Portable Audio

EV1720DQ-3-00A EVALUATION BOARD

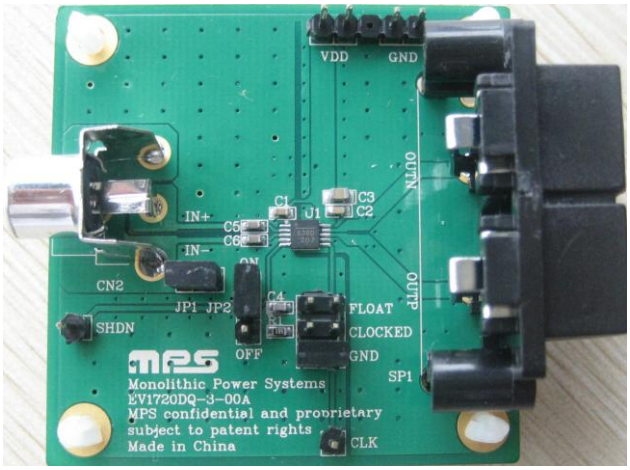

(L x W x H) 1.97" x 1.97" x 0.3"
(5.0cm x 5.0cm x 0.7cm)

Board Number	IC Number
EV1720DQ-3-00A	MP1720DQ-003

EMI Spectrum Diagram

VIN=3.3V, R_{LOAD}=8Ω, no output filter,
CLK=GND, Near field,
6 inch unshielded twisted-pair-speaker cable

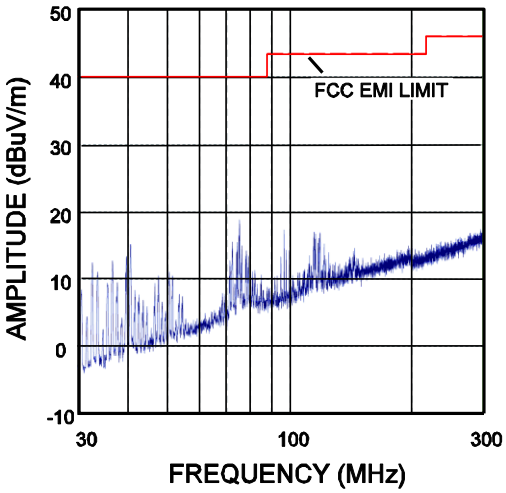

MPS Proprietary Information. Unauthorized Photocopy and Duplication Prohibited.
© 2013 MPS. All Rights Reserved.

SCHEMATICS FOR ACTUAL APPLICATION

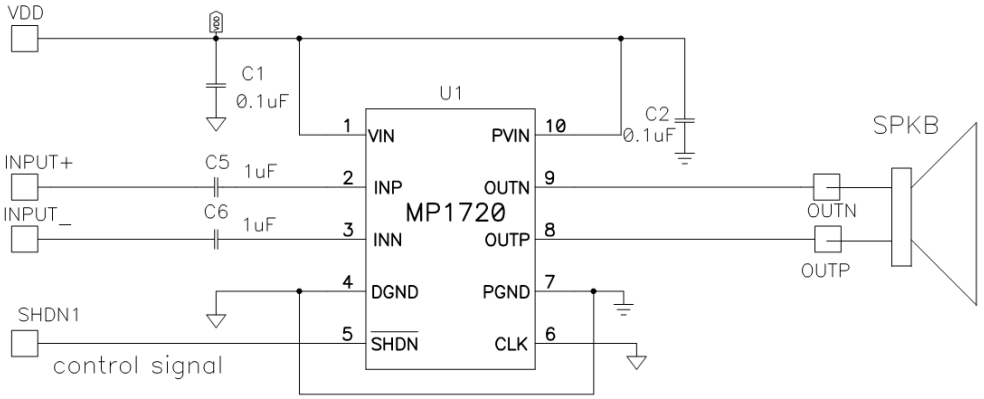

BILL OF MATERIALS FOR ACTUAL APPLICATION

Qty	Ref	Value	Description	Package	Manufacture	Part Number
2	C1,C2	0.1µF	Ceramic capacitor, X7R, 25V	0603	muRata	GRM188R71E104KA01
2	C5,C6	1µF	Ceramic capacitor, X5R, 6.3V	0603	muRata	GRM188R60J105KA01D
1	U1		Amplifier	QFN10	MPS	MP1720DQ-003

MPS Proprietary Information. Unauthorized Photocopy and Duplication Prohibited.
© 2013 MPS. All Rights Reserved.

SCHEMATICS FOR TEST

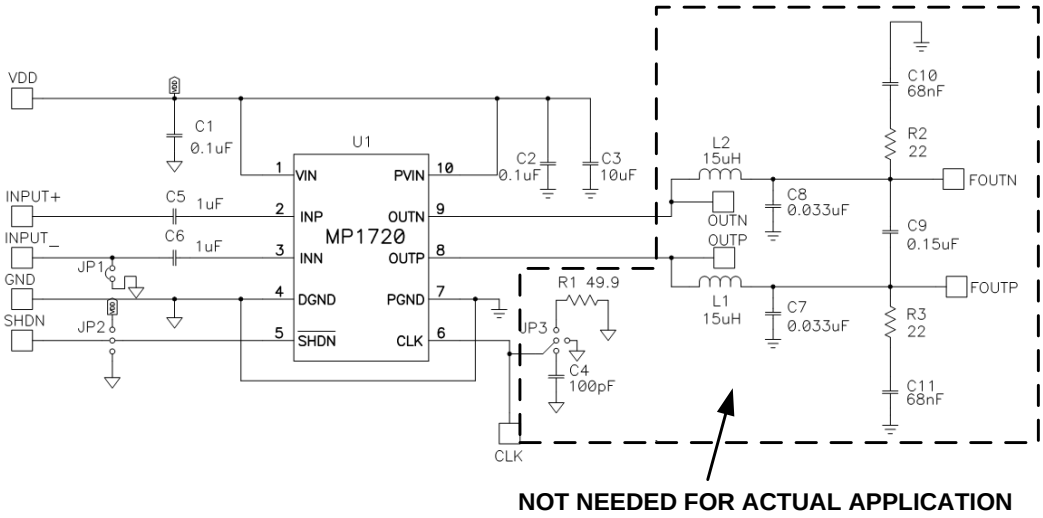

BILL OF MATERIALS FOR TEST

Qty	Ref	Value	Description	Package	Manufacture	Part Number
2	C1,C2	0.1µF	Ceramic capacitor, X7R, 25V	0603	muRata	GRM188R71E104KA01
1	C3(1)	10µF	Ceramic capacitor, X5R, 10V	0805	muRata	GRM21BR61A106KE19L
1	C4	100pF	Ceramic capacitor, C0G, 50V	0603	muRata	GRM1885C1H101JA01D
2	C5,C6	1µF	Ceramic capacitor, X5R, 6.3V	0603	muRata	GRM188R60J105KA01D
2	C7,C8(2)	33nF	Ceramic capacitor, X7R, 50V	0603	muRata	GRM188R71H333KA61D
1	C9(2)	0.15µF	Ceramic capacitor, X7R, 50V	0805	TDK	C2012X7R1H154K
2	C10,C11(2)	68nF	Ceramic capacitor, X7R, 50V	0603	muRata	GRM188R71H683KA93D
2	L1,L2(2)	15µH	Inductor,1.9A	DS75LC	TOKO	DS75LC-B1047AS-150M
1	R1	49.9Ω	Ceramic Resistor, 1%	0603	Yageo	RC0603FR-0749R9L
2	R2,R3(2)	22Ω	Ceramic Resistor, 1%	0603	Yageo	RC0603FR-0722RL
1	U1		Amplifier	QFN10	MPS	MP1720DQ-003
1	JP1		JUMPER/2PIN/0.1		any	
1	JP2		JUMPER/3PIN/0.1		any	
1	JP3		JUNPER/3PIN&3PIN/0.1		any	

Note:
1) It is required in system design.
2) These external components are used for performance test. For audio performance test, a LC low-pass filter (33nF, 15uH, 0.15uF) is required even if the analyzer has a low-pass filter. They are optional for normal operation

MPS Proprietary Information. Unauthorized Photocopy and Duplication Prohibited.
© 2013 MPS. All Rights Reserved.

PRINTED CIRCUIT BOARD LAYOUT

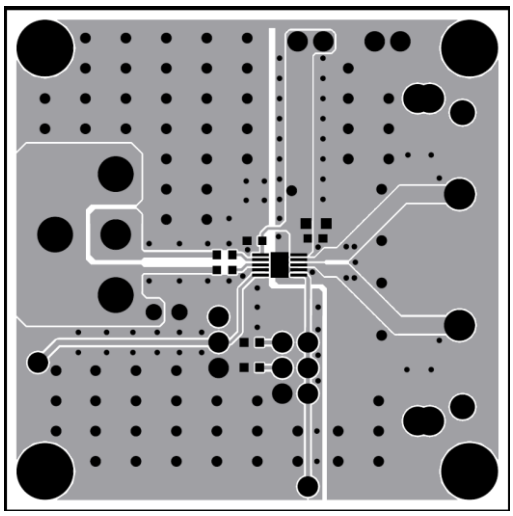

Figure 1—Top Layer

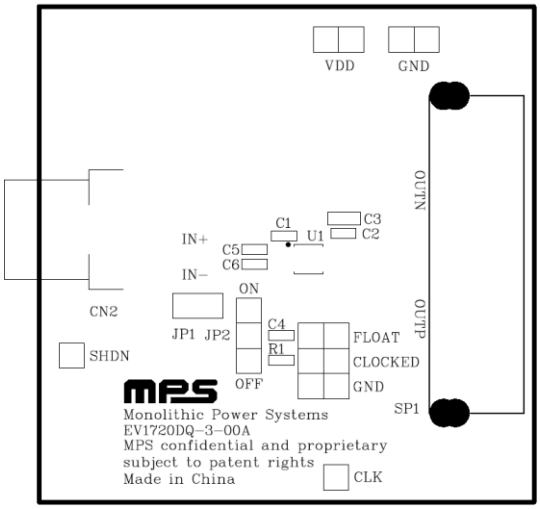

Figure 2—Top silk Layer

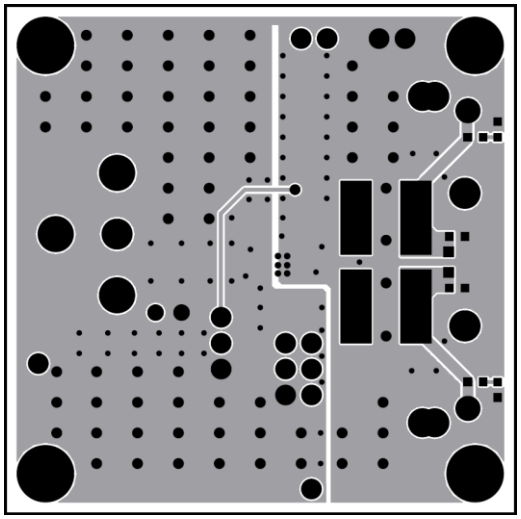

Figure 3—Bottom Layer

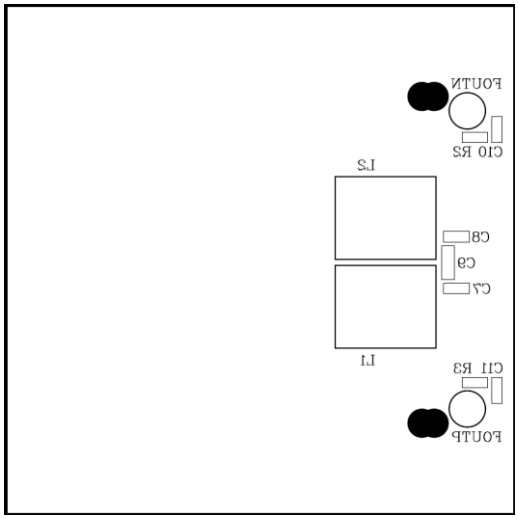

Figure 4—Bottom Silk Layer

MPS Proprietary Information. Unauthorized Photocopy and Duplication Prohibited.
© 2013 MPS. All Rights Reserved.

QUICK START GUIDE

This board is set up from the factory for MP1720DQ-003 evaluation. This EV board can also be used to evaluate the MP1720DQ-006, MP1720DQ-009, MP1720DQ-012, and MP1720DQ-216 (with IC replacement).

For audio performance test, the LC low-pass filter is required even if the analyzer has a low-pass filter. Please use FOUTP and FOUTN as the output terminals (see Figure 6).

For more information, refer to the MP1720 datasheet.

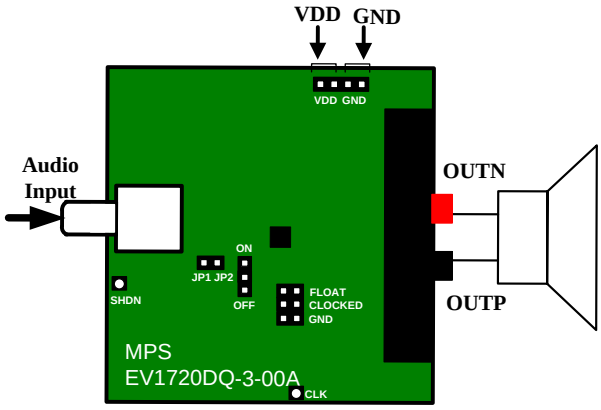

Figure 5—Connection for Normal Application (Top View)

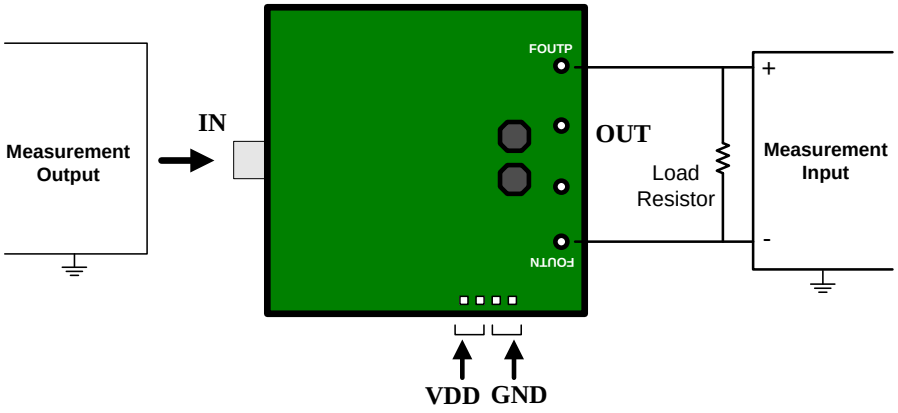

Figure 6—Connection for Audio Performance Test (Bottom View)

1. Setups for 5V operation

a) Connect the external power supply to the VDD terminal, and adjust to 5V (do not turn on).

b) Connect the SE input signal to the input terminals. If the input is differential configuration, remove the shunt of jumper JP1.

c) Connect the speaker to the output terminals.

MPS Proprietary Information. Unauthorized Photocopy and Duplication Prohibited.
© 2013 MPS. All Rights Reserved.

d) Set the amplifier CLK frequency as the table1.

Table1—CLK Operating Modes

CLK=GND	f_{CLK}=1.0MHz
CLK=FLOAT	f_{CLK}=1.3MHz
CLK=Clocked	f_{CLK}=external clock frequency (0.5~1.4MHz)

e) Turn on the power supply.

2. Turn on music

a) Set the jumper JP2 to 'ON', or drive /SHDN high.

b) Adjust the input signal to expected level.

3. Turn off music

a) Set the jumper JP2 to 'OFF', or drive /SHDN low.

b) Turn off the power supply.

NOTICE: The information in this document is subject to change without notice. Users should warrant and guarantee that third party Intellectual Property rights are not infringed upon when integrating MPS products into any application. MPS will not assume any legal responsibility for any said applications.

MPS Proprietary Information. Unauthorized Photocopy and Duplication Prohibited.
© 2013 MPS. All Rights Reserved.