TTC-6P-4-24DC-I-P - Surge protection plug

1106015

https://www.phoenixcontact.com/us/products/1106015

Please be informed that the data shown in this PDF document is generated from our online catalog. Please find the complete data in the user documentation. Our general terms of use for downloads are valid.



Surge protection plug with integrated status indicator on the module for a 4-wire floating signal circuit with a high nominal current. Nominal voltage: 24 V DC

Your advantages

- Efficient use of space: the narrowest pluggable surge protection solution for 4-conductor applications
- Easy function monitoring: on-site or optionally via remote signaling, with optical monitoring, without additional effort
- Servicing without affecting the signal: replace the surge protection module without affecting the measuring signal
- Flexible choice: Push-in Technology or screw connection

Commercial data

Item number	1106015
Packing unit	1 pc
Minimum order quantity	1 pc
Sales key	CL02
Product key	CL216Z
GTIN	4055626990569
Weight per piece (including packing)	17.12 g
Weight per piece (excluding packing)	16.62 g
Customs tariff number	85363010
Country of origin	DE

Technical data

Product properties

Product type	Replacement plug
Product family	TERMITRAB complete
Type	Male

Insulation characteristics

Overvoltage category	III
Pollution degree	2

Electrical properties

Nominal voltage U_N	24 V DC
	24 V AC

Connection data

Connection method	pluggable

Dimensions

Dimensional drawing	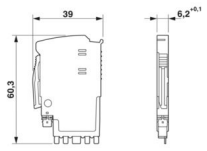
Width	6.2 mm +0.1 mm
Height	39 mm
Depth	60.3 mm

Material specifications

Color	light grey (RAL 7035)
Flammability rating according to UL 94	V-0
Insulating material	PBT
Housing material	PBT

Protective circuit

Direction of action	Line-Line & Line-Earth Ground
Maximum continuous voltage U_C	36 V DC
	30 V AC
Rated current	2.5 A (60°C for insulated systems)
Surge protection fault message	optical

Environmental and real-life conditions

Ambient conditions

Degree of protection	IP20

Ambient temperature (operation)	-40 °C ... 85 °C
Ambient temperature (storage/transport)	-40 °C ... 85 °C
Altitude	≤ 4000 m (amsl)
Permissible humidity (operation)	5 % ... 95 %

Standards and regulations

Standards/specifications	IEC 61643-21
Note	2000 + corrigendum 2001 + A1:2008, modified + A2:2012

EN 61643-21

Standards/specifications	EN 61643-21
Note	2001 + A1:2009 + A2:2013

Mounting

Mounting type	on base element

Drawings

Circuit diagram

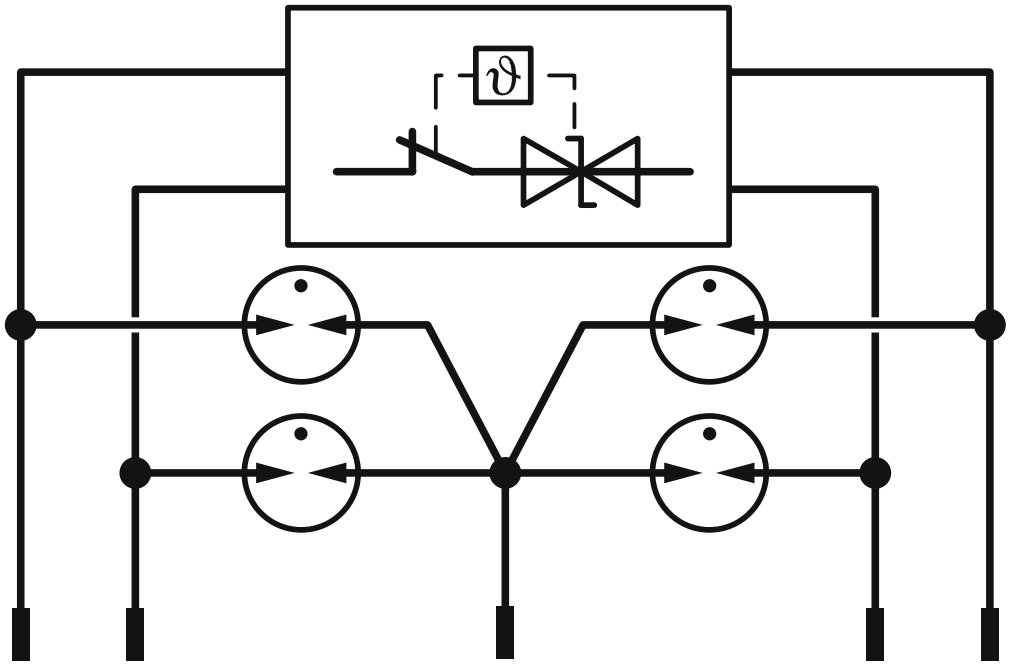

Dimensional drawing

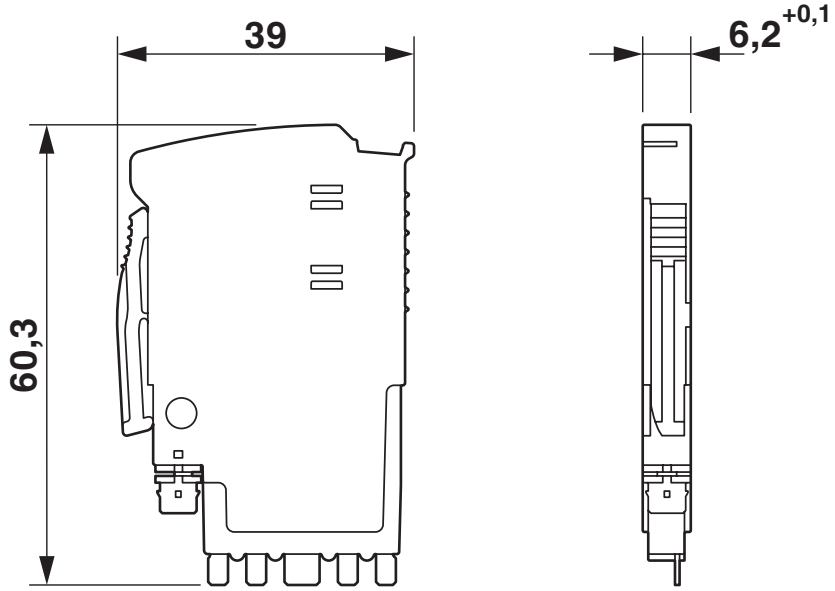

Approvals

To download certificates, visit the product detail page: https://www.phoenixcontact.com/us/products/1106015

UL Listed
Approval ID: FILE E 138168

UAE-RoHS
Approval ID: 22-06-16783

cUL Listed
Approval ID: FILE E 333250

UL Listed
Approval ID: FILE E 333250

cULus Listed

Classifications

ECLASS

ECLASS-11.0	27130890
ECLASS-13.0	27171501

ETIM

ETIM 9.0	EC001625

UNSPSC

UNSPSC 21.0	39121600

Environmental product compliance

EU RoHS

Fulfills EU RoHS substance requirements	Yes
Exemption	7(a)

China RoHS

Environment friendly use period (EFUP)	EFUP-50
	An article-related China RoHS declaration table can be found in the download area for the respective article under "Manufacturer declaration". For all articles with EFUP-E, no China RoHS declaration table issued and required.

EU REACH SVHC

REACH candidate substance (CAS No.)	Lead(CAS: 7439-92-1)
SCIP	757da08a-0abb-444a-bf4b-bfa26b245432

Accessories

ZBF 6 CUS - Zack Marker strip, flat

0825027

https://www.phoenixcontact.com/us/products/0825027



Zack Marker strip, flat, Strip, can be ordered: Strip, white, labeled according to customer specifications, mounting type: snap into flat marker groove, for terminal block width: 6.2 mm, lettering field size: 5.15 x 6.15 mm, Number of individual labels: 10

ZBF 6:UNBEDRUCKT - Zack Marker strip, flat

0808710

https://www.phoenixcontact.com/us/products/0808710



Zack Marker strip, flat, Strip, white, unlabeled, can be labeled with: PLOTMARK, CMS-P1-PLOTTER, mounting type: snapped, for terminal block width: 6.2 mm, lettering field size: 5.15 x 6.15 mm, Number of individual labels: 10

ZBF 6/WH-100:UNBEDRUCKT - Zack Marker strip, flat

0808736

https://www.phoenixcontact.com/us/products/0808736



Zack Marker strip, flat, Strip, white, unlabeled, can be labeled with: PLOTMARK, CMS-P1-PLOTTER, mounting type: snapped, for terminal block width: 6.2 mm, lettering field size: 5.15 x 6.15 mm, Number of individual labels: 1000

ZBF 6,QR:FORTL.ZAHLEN - Zack Marker strip, flat

0808765

https://www.phoenixcontact.com/us/products/0808765



Zack Marker strip, flat, Strip, white, labeled, Printed vertically: consecutive numbers 1 ... 10, 11 ... 20, etc. up to 91 ... 100, mounting type: snapped, for terminal block width: 6.2 mm, lettering field size: 5.15 x 6.15 mm, Number of individual labels: 10

X-PEN 0,35 - Marker pen

0811228

https://www.phoenixcontact.com/us/products/0811228



Marker pen without ink cartridge, for manual labeling of markers, labeling extremely wipe-proof, line thickness 0.35 mm

Phoenix Contact 2024 © - all rights reserved
https://www.phoenixcontact.com

Phoenix Contact USA
586 Fulling Mill Road
Middletown, PA 17057, United States
(+717) 944-1300
info@phoenixcon.com