CUI DEVICES

MODEL: PJ-102B | DESCRIPTION: DC POWER JACK

FEATURES

- 2.5 mm center pin
- 2.5 A rating
- right-angle orientation
- through hole
- tapered pins



RoHS

SPECIFICATIONS

parameter	conditions/description	min	typ	max	units
rated input voltage			24		Vdc
rated input current				2.5	A
contact resistance[1]	between terminal and mating plug between terminal in a closed circuit			50 30	mΩ mΩ
insulation resistance	at 500 Vdc	100			MΩ
voltage withstand	at 50/60Hz for 1 minute			500	Vac
insertion/withdrawal force		0.3		3	kg
terminal strength	any direction for 10 seconds			500	g
operating temperature		-25		85	°C
life			5,000		cycles
flammability rating	UL94V-0				
RoHS	yes				

Note: 1. When measured at a current of less than 100 mA/1 kHz

SOLDERABILITY

parameter	conditions/description	min	typ	max	units
wave soldering	dipped in solder pot for 5 ±0.5 seconds	255	260	265	°C

MECHANICAL DRAWING

units: mm[inches]
tolerance:
X.X ±0.2mm
X.XX ±0.1mm
X.XXX ±0.05mm

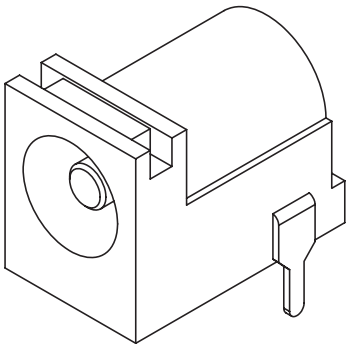

	MATERIAL	PLATING
center pin	copper	nickel
terminal 1	brass	tin
terminal 2	copper alloy	tin
terminal 3	brass	tin
plastic	PBT	

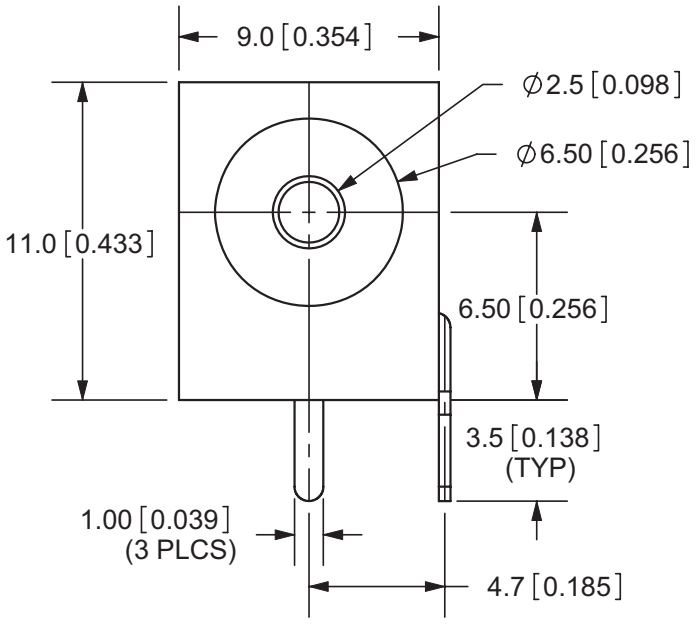

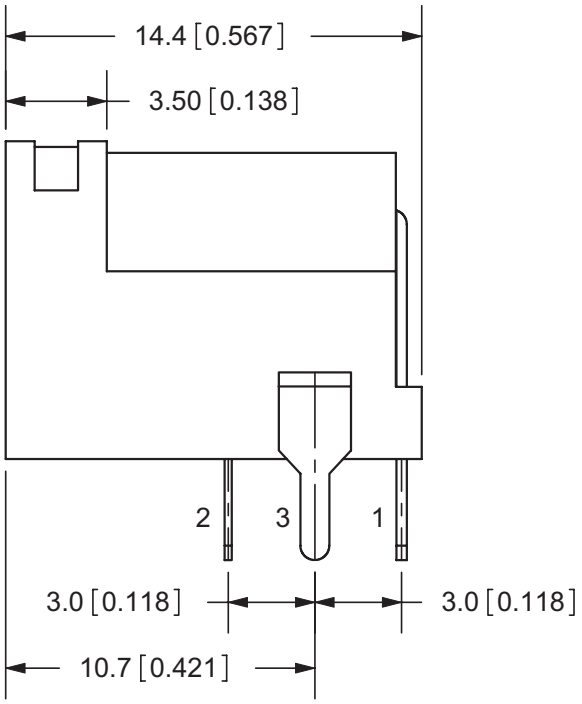

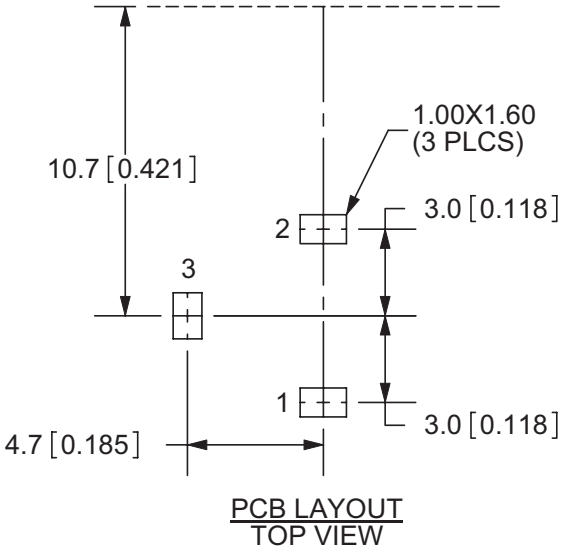

PCB LAYOUT
TOP VIEW

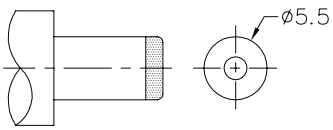

MATING PLUG
Jack Insertion Depth: 9.0 mm

SCHEMATIC	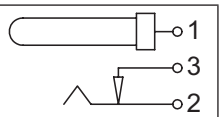
Model	PJ-102B
Center Pin	Ø2.5 mm

Note: 1. All specifications measured at 10~35°C, humidity at 45~85%, under standard atmospheric pressure, unless otherwise noted.

REVISION HISTORY

rev.	description	date
1.0	initial release	11/17/2005
1.01	updated contact resistance	06/06/2006
1.02	applied new spec template	10/07/2013
1.03	increased voltage rating	04/21/2016
1.04	brand update	10/30/2019

The revision history provided is for informational purposes only and is believed to be accurate.

CUI DEVICES

CUI Devices offers a one (1) year limited warranty. Complete warranty information is listed on our website.

CUI Devices reserves the right to make changes to the product at any time without notice. Information provided by CUI Devices is believed to be accurate and reliable. However, no responsibility is assumed by CUI Devices for its use, nor for any infringements of patents or other rights of third parties which may result from its use.

CUI Devices products are not authorized or warranted for use as critical components in equipment that requires an extremely high level of reliability. A critical component is any component of a life support device or system whose failure to perform can be reasonably expected to cause the failure of the life support device or system, or to affect its safety or effectiveness.

cuidevices.com