VS-IP20-M12FSBP-93B-LI/2,0 - Network cable

1416158

https://www.phoenixcontact.com/us/products/1416158

Please be informed that the data shown in this PDF document is generated from our online catalog. Please find the complete data in the user documentation. Our general terms of use for downloads are valid.



Assembled PROFINET cable, CAT 5e, shielded, star quad, AWG 22 stranded (7-wire), RAL 6018 (yellow-green), RJ45 plug/IP20 on M12 flush-type socket, rear/screw mounting with M16 thread, line, length: 2 m

Commercial data

Item number	1416158
Packing unit	1 pc
Minimum order quantity	1 pc
Sales key	AB18
Product key	ABNPAB
Catalog page	Page 236 (PC-2009)
GTIN	4046356474238
Weight per piece (including packing)	169.4 g
Weight per piece (excluding packing)	167 g
Customs tariff number	85444210
Country of origin	PL

Technical data

Product properties

Product type	Circular connectors (device side)
Sensor type	PROFINET
Number of positions	4
No. of cable outlets	1
Shielded	yes
Cable outlet	straight

Insulation characteristics

Degree of pollution	3

Material specifications

Flammability rating according to UL 94	V0
Outer sheath, material	PVC
Conductor material	Tin-plated Cu litz wires

Electrical properties

Transmission medium	Copper
Transmission characteristics (category)	CAT5 (IEC 11801:2002)
Transmission speed	100 Mbps
Wave impedance	100 Ω

Mechanical properties

Mechanical data

Insertion/withdrawal cycles	≥ 100
Insertion force per signal contact	50.00 N
Extraction force per signal contact	30 N

Connector

Connection 1

Type	Plug straight RJ45
Shielded	yes
Degree of protection	IP20

Connection 2

Type	Flush-type female connector straight M12
Shielded	yes
Insertion/withdrawal cycles	> 100
Degree of protection	IP67

Cable/line

Cable length	2.00 m

PROFINET PVC stranded CAT5 [93B]

Dimensional drawing	
Shielded	yes
UL AWM Style	21694
Cable weight	67 kg/km
Cable type	PROFINET PVC stranded CAT5
Short symbol	2YY(ST)CY
Cable type (abbreviation)	93B
Signal type/category	PROFINET CAT5 (IEC 11801), 100 Mbps
	EtherCAT® CAT5 (IEC 11801), 100 Mbps
Cable structure	1x4xAWG22/7, SF/TQ
External cable diameter	6.50 mm ±0.2 mm
Outer sheath, material	PVC
External sheath, color	green RAL 6018
Thickness, outer sheath	approx. 0.90 mm
Material, inner sheath	PVC
Conductor material	Tin-plated Cu litz wires
Conductor structure signal line	7x 0.25 mm
AWG signal line	22
Conductor cross section	4x 0.34 mm²
Material wire insulation	PE
Wire diameter incl. insulation	1.55 mm
Single wire, color	white, yellow, blue, orange
Overall twist	Star quad
Shielding	Aluminum-coated foil, tinned copper braided shield
Optical shield covering	85 %
Nominal voltage, cable	600 V
Test voltage Core/Core	2000 V (50 Hz, 1 min.)
Test voltage Core/Shield	2000.00 V (50 Hz, 1 min.)
Cable insulation resistance	≥ 500 MΩ*km
Coupling resistance	≤ 20.00 mΩ/m (at 10 MHz)
Wave impedance	100 Ω ±15 Ω (at 100 MHz)
Loop resistance	≤ 120.00 Ω/km
Signal runtime	5.3 ns/m
Signal speed	0.66 c
Minimum bending radius, fixed installation	3 x D

Minimum bending radius, flexible installation	7 x D
Near end crosstalk attenuation (NEXT)	80 dB (with 1 MHz)
	76 dB (at 4 MHz)
	70 dB (at 10 MHz)
	65 dB (at 16 MHz)
	63 dB (at 20 MHz)
	60 dB (at 31.25 MHz)
	55 dB (at 62.5 MHz)
	50 dB (at 100 MHz)
Resistance to oil	Resistant to oil to a limited extent
Flame resistance	according to UL 1685 (CSA FT 4)
Other resistance	UV resistant (According to UL 1581, Section 1200)
Ambient temperature (operation)	-40 °C ... 70 °C (Cable, flexible installation)
	-40 °C ... 70 °C (cable, fixed installation)

Environmental and real-life conditions

Ambient conditions

Degree of protection	IP20
	IP67
	IP67/IP20
Ambient temperature (operation)	-25 °C ... 60 °C (cable, fixed installation)
	-5 °C ... 50 °C (Cable, flexible installation)

Drawings

Dimensional drawing

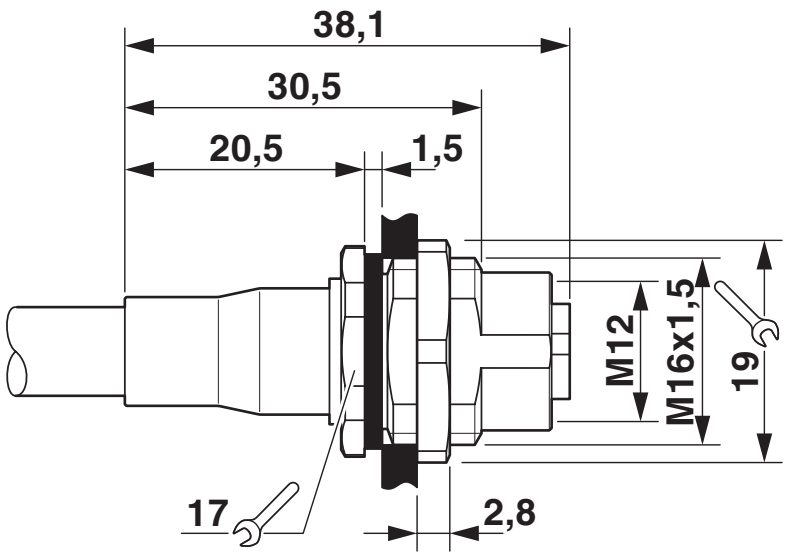

M12 flush-type connector

Dimensional drawing

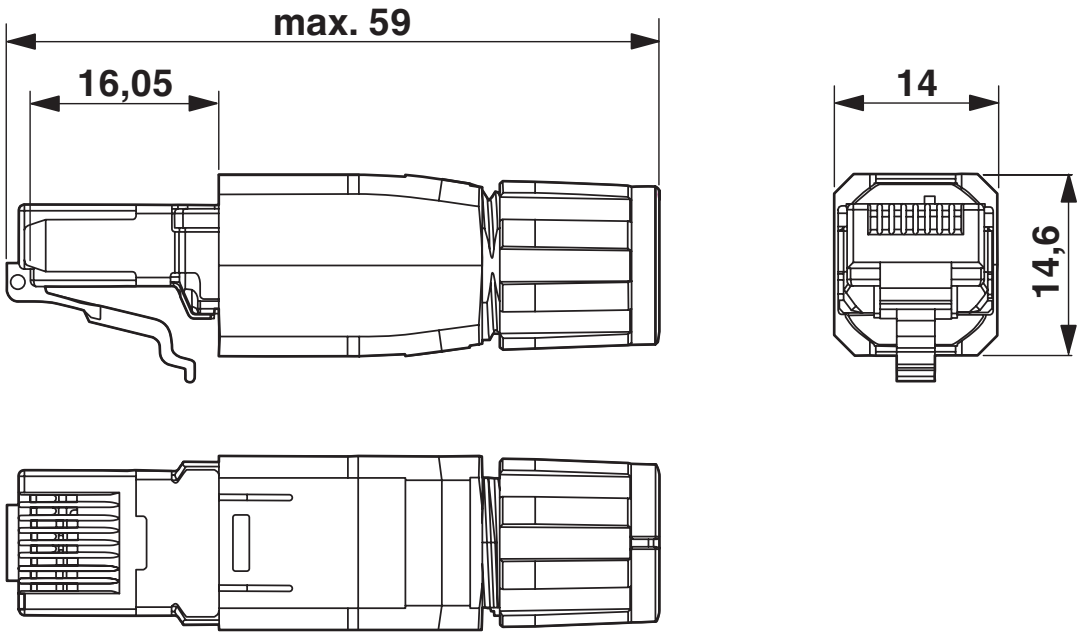

RJ45 connector, IP20

Approvals

To download certificates, visit the product detail page: https://www.phoenixcontact.com/us/products/1416158

EAC
Approval ID: 19060508

Classifications

ECLASS

ECLASS-11.0	27060307
ECLASS-12.0	27060307
ECLASS-13.0	27060307

ETIM

ETIM 9.0	EC001855

UNSPSC

UNSPSC 21.0	26121600

Environmental product compliance

EU RoHS

Fulfills EU RoHS substance requirements	Yes
Exemption	6(c)

China RoHS

Environment friendly use period (EFUP)	EFUP-50
	An article-related China RoHS declaration table can be found in the download area for the respective article under "Manufacturer declaration". For all articles with EFUP-E, no China RoHS declaration table issued and required.

EU REACH SVHC

REACH candidate substance (CAS No.)	Lead(CAS: 7439-92-1)
SCIP	80687f88-6257-425f-a661-a536f58a2742

Phoenix Contact 2024 © - all rights reserved
https://www.phoenixcontact.com

Phoenix Contact USA
586 Fulling Mill Road
Middletown, PA 17057, United States
(+717) 944-1300
info@phoenixcon.com