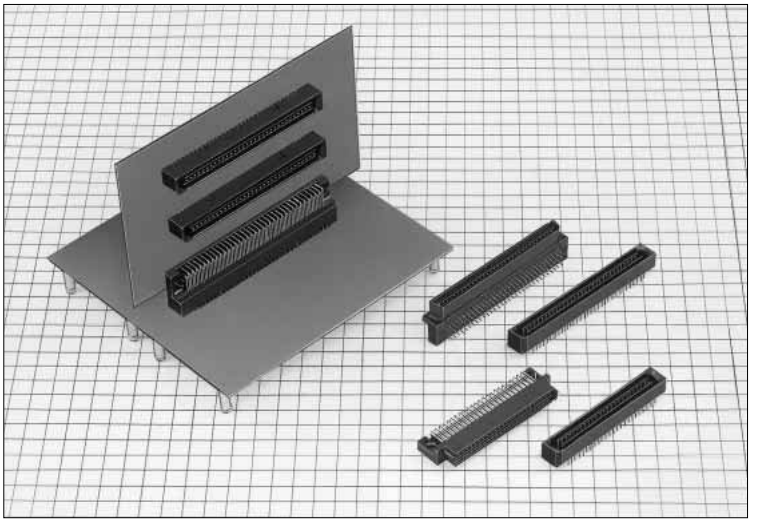

DIN duplex density mount has been achieved.
(DIN 96 contacts and FX1 192 (96x2)



Photo 1

■Features

1. High density and space saved-DIN Duplex Mount Achieved

The alignment of the mating area in 4-row allows to duplex the number of contacts in the nearly equivalent mount square as for the conventional DIN connector.(Refer to photo (1).)

2. High Current and High Voltage

Two-thirds of total contact numbers are used for half pitch signaling contact, while the other one-third thereof is used for the power ground contact. Power ground contact corresponds to high current (1A) and high voltage (250V).

3. Sequence Structure

Considering insertion/extraction in active power mode and maintenance on the end user side, the FX1 series is designed in a mechanism that can afford the time different contact at two steps. (For details, refer to Figure (2) as shown on the right.)

4. Mis-insertion Prevent

Provide the insertion guide on both ends of connector, and widen an inductive area in order to prevent mis-insertion.



Sequence Structure
(Pin contact sequence)

Figure 2

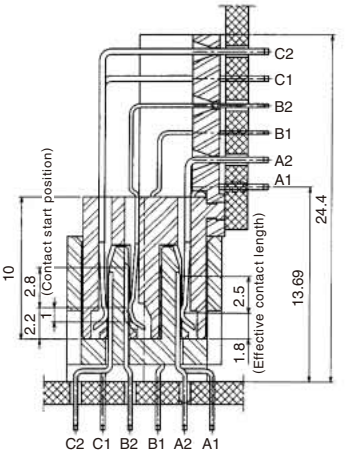



*FX1 Series (2 step sequence)

1	Row B
2	Row A, row C

Setting row B to ground, if active cable insertion and extraction are performed as power supply, arc will occur between contact and contact. The row B contact structure is constructed to separate arc occurrence point a and normal contact point b, and minimizes affects on the contact.

Aug.1.2025 Copyright 2025 HIROSE ELECTRIC CO., LTD. All Rights Reserved.

In cases where the application will demand a high level of reliability, such as automotive, please contact a company representative for further information.

■Product Specifications

Rating	Current rating Signal Contact: 0.5A Power Supply Contact: 1A	Voltage rating Signal Contact: 125V AC Power Supply Contact: 250V AC	Operating Temperature Range -55 to 85℃ (Note 1) Operating Humidity Range 40 to 80%	Storage Temperature Range -10 to +60℃(Note 2) Operating Humidity Range 40 to 70% (Note 2)

Item	Specification	Condition
1. Insulation Resistance	1000M ohms min.	250V DC
2. Withstanding Voltage	No flashover or insulation breakdown.	1 minute Signal contact 300V AC Power supply contact 600V AC
3. Contact Resistance	60m ohms max. (conductor resistance included)	100mA
4. Vibration	No electrical discontinuity of 1μs or more	Frequency: 10 to 55 Hz, single amplitude of 0.75 mm, 2 hours in each of the 3 directions.
5. Humidity (Steady state)	Contact resistance: 70m ohms max. Insulation resistance: 1000M ohms min.	96 hours at temperature of 40℃ and humidity of 90% to 95%
6. Temperature Cycle	Contact resistance: 70m ohms max. Insulation resistance: 1000M ohms min.	(-55℃: 30 minutes→15- to 35℃: 5 minutes max.→ 85℃: 30 minutes→15- to 35℃: 5 minutes max.) 5 cycles
7. Durability (Mating/un-mating)	Contact resistance: 70 m ohms max.	500 cycles

Note 1: Includes temperature rise caused by current flow.
Note 2: The term "storage" refers to products stored for long period of time prior to mounting and use. Operating Temperature Range and Humidity range covers non conducting condition of installed connectors in storage, shipment or during transportation.
Note 3: Information contained in this catalog represents general requirements for this Series. Contact us for the drawings and specifications for a specific part number shown.

■Material

●FX1 Series

Parts		Material	Finish	Remarks
Insulator	Header	PPS	Black	UL94V-0
	Receptacle	PPS/ PTB		
Contact	Straight header	Brass	Contact area:Tin plated Lead area:Tin plated	————
	Right angle header	Phosphor bronze		
	Receptacle	Phosphor bronze		
Prefixed pin		Phosphor bronze	Tin plated	————

Aug.1.2025 Copyright 2025 HIROSE ELECTRIC CO., LTD. All Rights Reserved.

■Ordering Information

●FX1 Series

FX1 - 192 P - 1.27 DSA L
❶ ❷ ❸ ❹ ❺ ❻

❶ Series Name : FX1	❹ Contact pitch: 1.27mm
❷ Number of contacts: 144, 192, 216	❺ Contact type: DS : Right angle DSA : Straight
❸ Connector type : P-header : S-receptacle	❻ L: Board prefixed pin

Note: The cleaning type only is applied on the header side to FX1 series.

◆Application Pattern

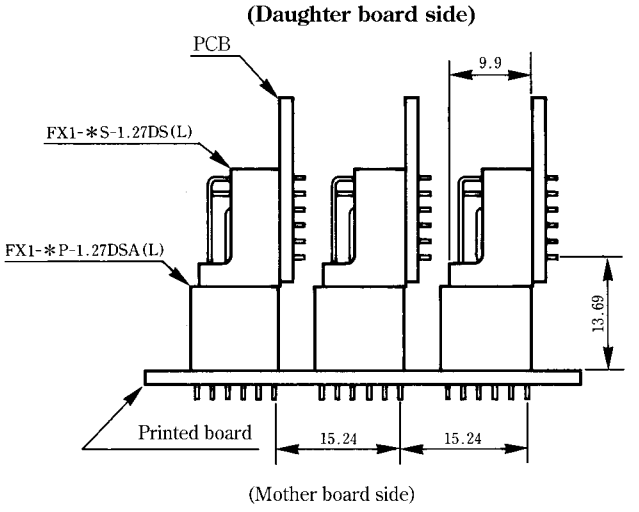

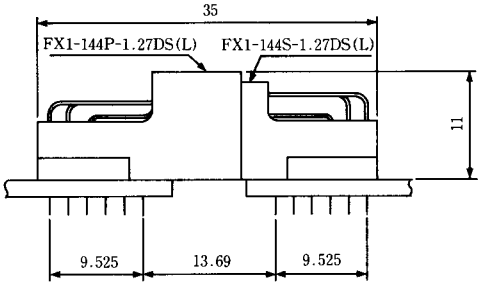

Note: FX1V series is designed similar

Aug.1.2025 Copyright 2025 HIROSE ELECTRIC CO., LTD. All Rights Reserved.

FX1 Series

■Receptacle : Right Angle Type

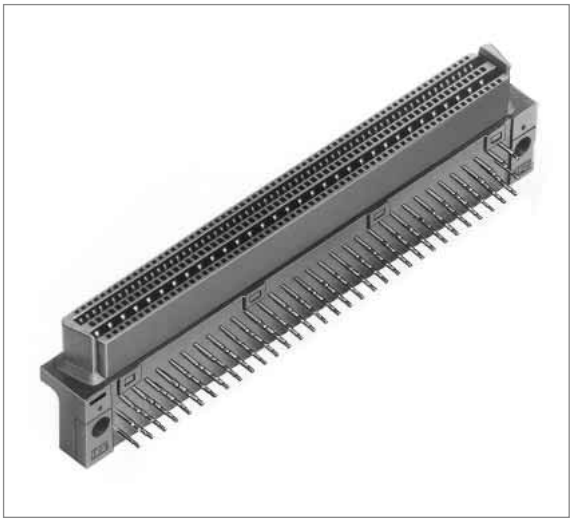

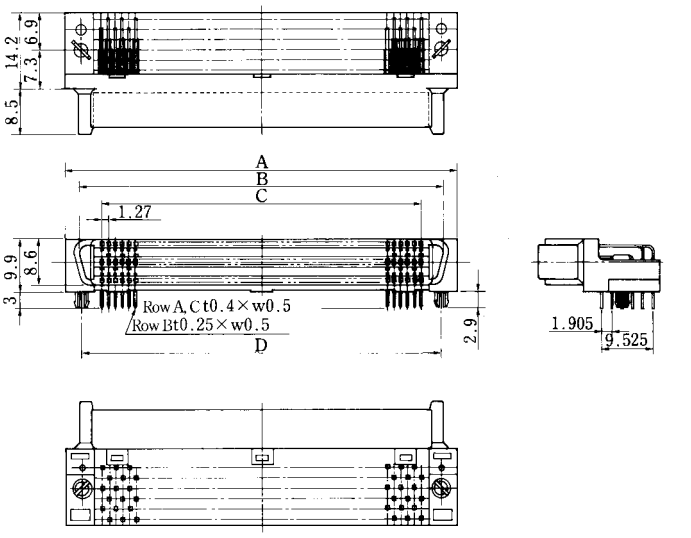

◆PCB mounting pattern Applicable board thickness t=1.6mm

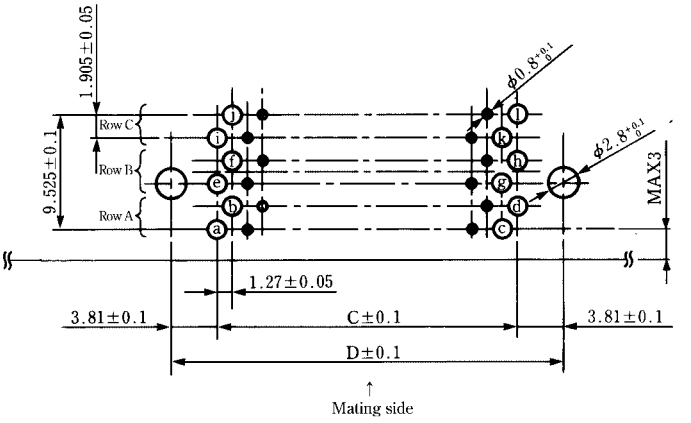

n= number of contacts

ⓐ A1	ⓔ B1	ⓘ C1
ⓑ A2	ⓕ B2	ⓙ C2
ⓒ $A\frac{n}{3}-1$	ⓖ $B\frac{n}{3}-1$	ⓚ $C\frac{n}{3}-1$
ⓓ $A\frac{n}{3}$	ⓗ $B\frac{n}{3}$	ⓛ $C\frac{n}{3}$

Unit: mm

Part Number	CL No.	Number of Contacts	A	B	C	D	RoHS
FX1-144S-1.27DS(71)	571-0003-7-71	144	73.29	68.08	59.69	——	YES
FX1-144S-1.27DSL(71)	571-0053-5-71					67.31	
FX1-192S-1.27DS(71)	571-0004-0-71	192	93.61	88.4	80.01	——	
FX1-192S-1.27DSL(71)	571-0054-8-71					87.63	
FX1-216S-1.27DS(71)	571-0005-2-71	216	103.77	98.56	90.17	——	
FX1-216S-1.27DSL(71)	571-0055-0-71					97.79	

Aug.1.2025 Copyright 2025 HIROSE ELECTRIC CO., LTD. All Rights Reserved.

■Header : Straight Type

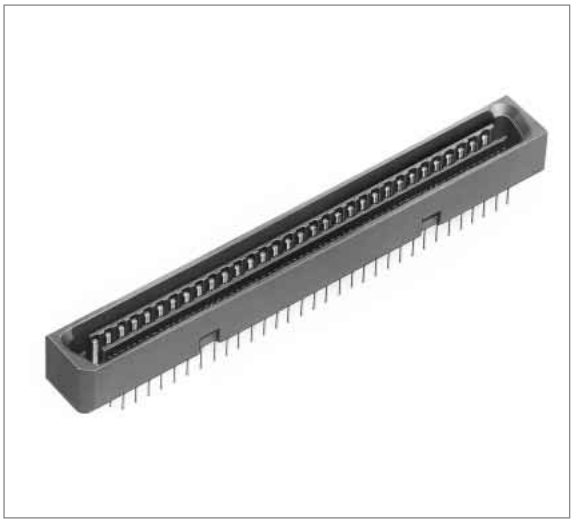

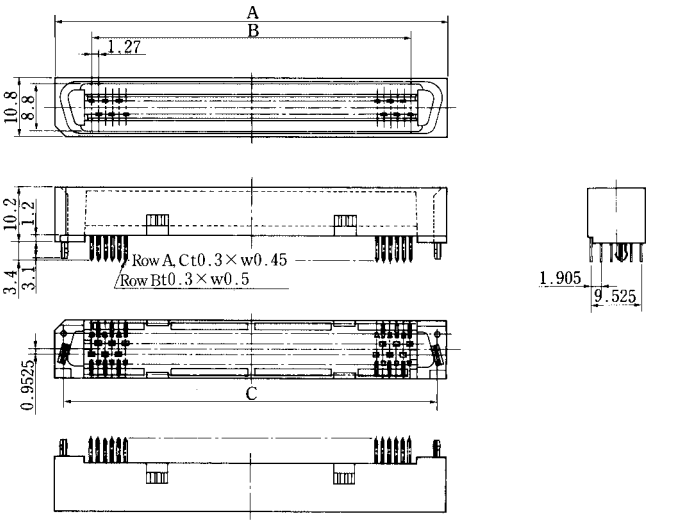

◆PCB mounting pattern Applicable board thickness t=1.6mm

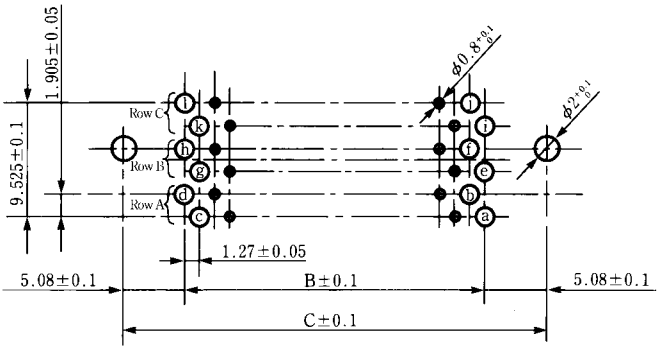

● If no board prefixed pin is used, ϕ 2 is not required on the board.

n= number of contacts

ⓐ A1	ⓔ B1	ⓘ C1
ⓑ A2	ⓕ B2	ⓙ C2
ⓒ $A\frac{n}{3}-1$	ⓖ $B\frac{n}{3}-1$	ⓚ $C\frac{n}{3}-1$
ⓓ $A\frac{n}{3}$	ⓗ $B\frac{n}{3}$	ⓛ $C\frac{n}{3}$

Unit: mm

Part Number	CL No.	Number of Contacts	A	B	C	RoHS
FX1-144P-1.27DSA(71)	571-0303-0-71	144	73.29	59.69	——	YES
FX1-144P-1.27DSAL(71)	571-0353-9-71				69.85	
FX1-192P-1.27DSA(71)	571-0304-3-71	192	93.61	80.01	——	
FX1-192P-1.27DSAL(71)	571-0354-1-71				90.17	
FX1-216P-1.27DSA(71)	571-0305-6-71	216	103.77	90.17	——	
FX1-216P-1.27DSAL(71)	571-0355-4-71				100.33	

Aug.1.2025 Copyright 2025 HIROSE ELECTRIC CO., LTD. All Rights Reserved.

■Header : Right Angle Type



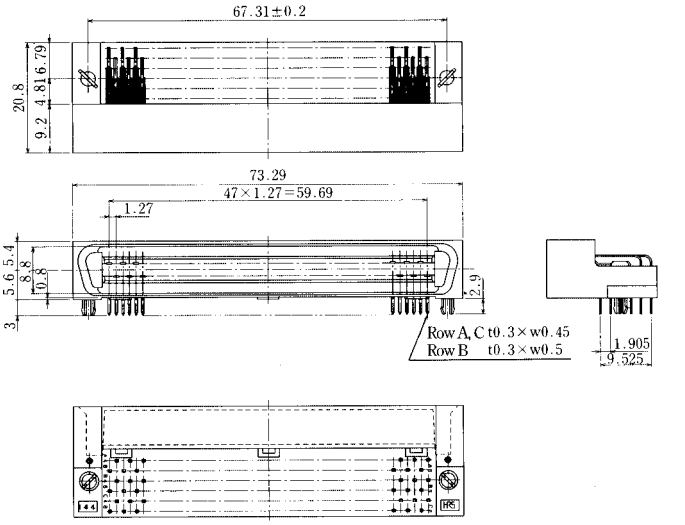

◆PCB mounting pattern Applicable board thickness t=1.6mm

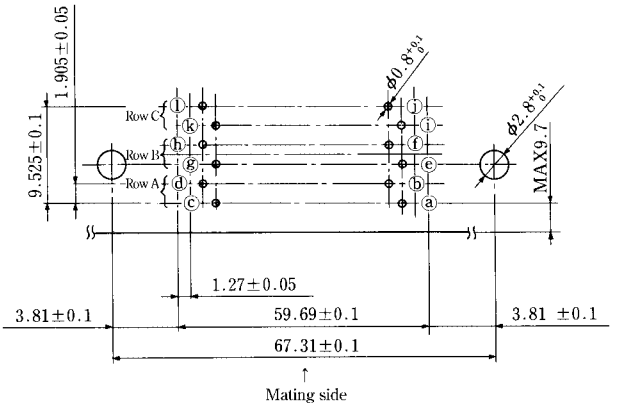

n= number of contacts

ⓐ A1	ⓔ B1	ⓘ C1
ⓑ A2	ⓕ B2	ⓙ C2
ⓒ $A\frac{n}{3}-1$	ⓖ $B\frac{n}{3}-1$	ⓚ $C\frac{n}{3}-1$
ⓓ $A\frac{n}{3}$	ⓗ $B\frac{n}{3}$	ⓛ $C\frac{n}{3}$

Part Number	CL No.	Number of Contacts	RoHS
FX1-144P-1.27DS(71)	571-0203-6-71	144	YES
FX1-144P-1.27DSL(71)	571-0253-4-71		

Aug.1.2025 Copyright 2025 HIROSE ELECTRIC CO., LTD. All Rights Reserved.

Precautions

1. Soldering
   (1)In the case of manual soldering, complete services under the condition of soldering iron bit temperature below 360℃ for 5 seconds max. Please be sure to coat the contacts with solder so that no force is given.
   (2)In the case of dip soldering bath, complete service under the condition of soldering iron bit temperature below 260℃ for 10 seconds max.
2. Prefixed function
   If the prefixed function is required, please use to the board prefixed pin type.

Aug.1.2025 Copyright 2025 HIROSE ELECTRIC CO., LTD. All Rights Reserved.