PART NUMBER	DIMENSION "L"
203263-6085	18.52
203263-6185	25.52
203263-6285	20.92
203263-6385	30.92
203263-6485	29.42
203263-6585	23.77
203263-6685	40.00
203263-6785	51.52
203263-6885	45.50
203263-6985	14.02
203263-8085	16.00
203263-8185	20.00
203263-8285	26.00
203263-8485	36.00
203263-8585	48.00
203263-8385	92.10

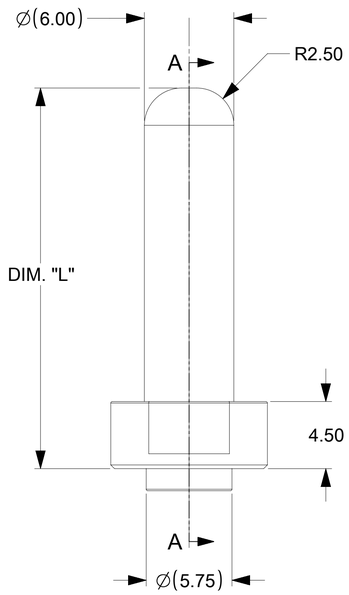

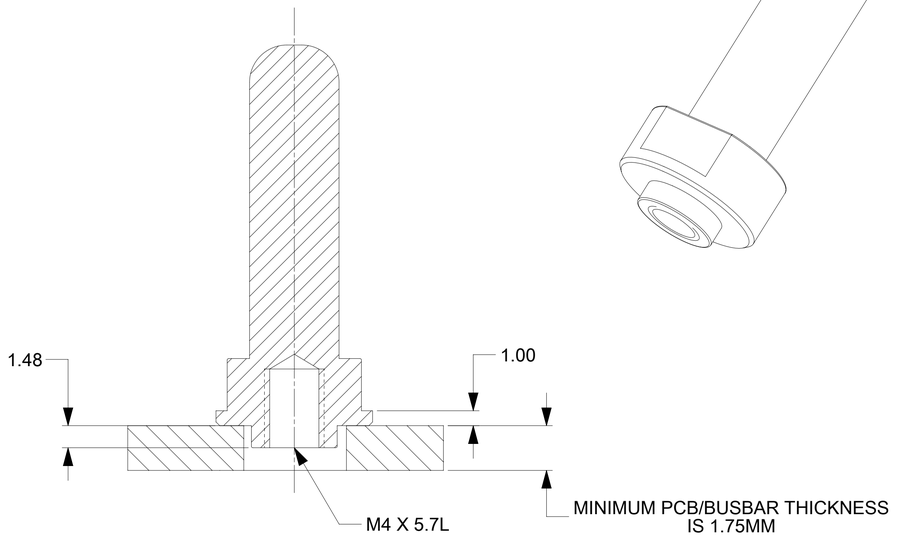

SECTION A-A

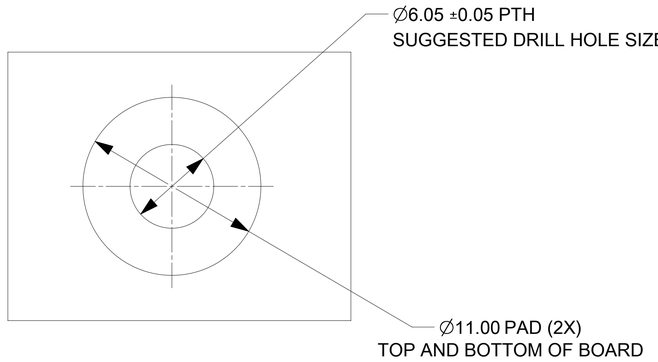

RECOMMENDED PCB OR BUSBAR LAYOUT

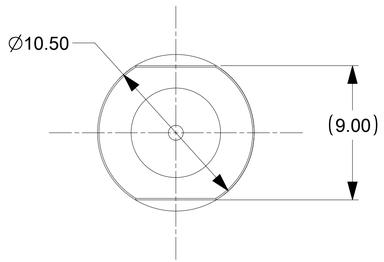

NOTES:

1. MATERIALS:
   BASE METAL: HIGH CONDUCTIVE COPPER ALLOY
   PLATING ON BODY: 3.18 MICRON MIN SILVER OVER 1.27 MICRON MIN NICKEL
2. PRODUCT SPECIFICATION: 2043130006-PS
3. APPLICATION SPECIFICATION: 2043130006-AS
4. PARTS TO BE PACKAGED AS PER PACKAGING SPECIFICATION: 2032630006-PK
5. SILVER COMPONENTS WILL BE SUPPLIED TARNISH FREE BUT MAY TARNISH OVER TIME.
6. PART MOUNTED WITH CONDUCTIVE M4 SCREW AND CONDUCTIVE BELLEVILLE WASHER FOR OPTIMAL PERFORMANCE
7. SCREW LENGTH TO BE DETERMINED BY CUSTOMER, SCREWS AND WASHERS ARE NOT SUPPLIED BY MOLEX.

THIS DRAWING CONTAINS INFORMATION THAT IS PROPRIETARY TO MOLEX ELECTRONIC TECHNOLOGIES, LLC AND SHOULD NOT BE USED WITHOUT WRITTEN PERMISSION

DIMENSION UNITS	mm
SCALE	5:1
GENERAL TOLERANCES (UNLESS SPECIFIED)	
ANGULAR TOL	± 0.5 °
4 PLACES	±
3 PLACES	±
2 PLACES	± 0.15
1 PLACE	± 0.25
0 PLACES	±
DRAFT WHERE APPLICABLE MUST REMAIN WITHIN DIMENSIONS	

CURRENT REV DESC: UPDATED NOTES

EC NO: 748054
DRWN: SUVARS 2023/02/07
CHK'D: SUVARS 2023/05/08
APPR: HTHYAGARAJ 2023/05/22

INITIAL REVISION:
DRWN: JJONIAK 2018/10/10
APPR: BPISZCZOR 2019/03/22

molex

SENTRALITY 6.00MM MALE TERMINAL
SCREW MOUNT

PRODUCT CUSTOMER DRAWING

DOCUMENT NUMBER	DOC TYPE	DOC PART	REVISION
2032636185-SD	PSD	000	B5

THIRD ANGLE PROJECTION	DRAWING	SERIES	MATERIAL NUMBER	CUSTOMER	SHEET NUMBER
	D-SIZE	203263	SEE TABLE	GENERAL MARKET	1 OF 1

DOCUMENT STATUS	P1	RELEASE DATE	2023/05/22 16:12:39