Surge Protection Devices
SPD2 3P+1 SERIES

Class II/Type 2/Type 1 CA Pluggable Multi-Pole



Description

Surge protection devices (SPDs) provide equipment protection from transient overvoltage events lasting micro-seconds. By limiting the overvoltage to the equipment during these events, costly damage and downtime can be mitigated.

The surge protection devices for the 3+1 configuration are available for 240 V to 277 V nominal voltage sub-distribution board applications.

Internal Configuration

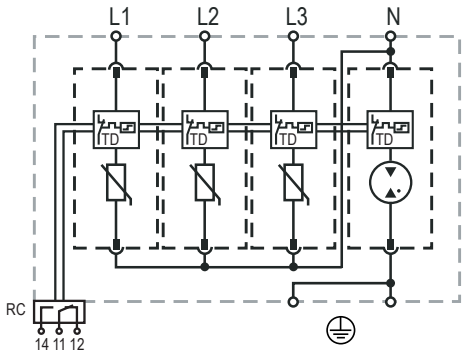

Legend

L *Line*
N *Neutral*
⏚ *Protective Earth*
RC *Remote Contacts*
TD *Thermal Disconnection*

Features & Benefits

FEATURES	BENEFITS
Capability to clamp and withstand high-energy transients	Ensures low-residual voltage during high-energy surge events and higher nominal discharge current to prevent disruption, downtime, and degradation or damage to equipment
UL Recognized and VDE-IEC compliant in single part number	One component can be utilized globally, reducing inventory needs and simplifying allocation of parts
Interlocking tab mechanism	Secures module to withstand vibration
No additional overcurrent protection devices required in UL applications	Reduces the number of components and costs required for protection
Compact footprint	Increases panel design flexibility
Visual life indicator	Quick visual determines module replacement status to avoid loss of protection
Pluggable modules	Fast and simple to replace, minimizing maintenance and downtime. No tools required
Thermal protection	Eliminates catastrophic failure
IP20 protection rating	Finger-safe design increases worker protection

Module & Base Ordering Information

Ordering Number	IEC Electrical										UL Electrical				Single Unit Weight
	Nominal AC Voltage (50/60Hz) (U_c/U_n)	Maximum Continuous Operating AC Voltage (L-N / N-PE U_c)	Nominal Discharge Current (8/20 µs) (L-N / N-PE I_n)	Maximum Discharge Current (8/20 µs) (L-N / N-PE I_{max})	Voltage Protection Level (L-N / N-PE U_p)	Follow Current Interrupt Rating (N-PE I_{fi})	Short-Circuit AC Current Rating (L-N I_{SCCR})	TOV Withstand 5 s (L-N U_T)	TOV 120 min (L-N U_T) / Mode	TOV Withstand 200 ms (N-PE U_T)	Maximum Continuous AC Operating Voltage (L-N / N-PE MCOV)	Voltage Protection Rating (L-N / N-PE VPR)	Nominal Discharge Current (8/20 µs) (L-N / N-PE I_n)	Short-Circuit Current Rating (L-N SCCR)	
SPD2-300-3P1-R	240 V	300 V/ 305 V	20 kA/ 40 kA	50 kA/ 65 kA	1500 V/ 1500 V	100 A_{RMS}	25 kA/ 50 kA	337 V	442 V/ Safe Fail	1200 V	300 V/ 305 V	900 V/ 1000 V	20 kA/ 20 kA	150 kA	486 g (1.072 lb)
SPD2-350-3P1-R	277 V	350 V/ 305 V	20 kA/ 40 kA	50 kA/ 65 kA	1750 V/ 1500 V	100 A_{RMS}	25 kA/ 50 kA	403 V	529 V/ Safe Fail	1200 V	350 V/ 305 V	1000 V/ 1000 V	20 kA/ 20 kA	200 kA	501 g (1.105 lb)

© 2019 Littelfuse, Inc.

Surge Protection Devices
SPD2 3P+1 SERIES

Module & Base Part Numbering System

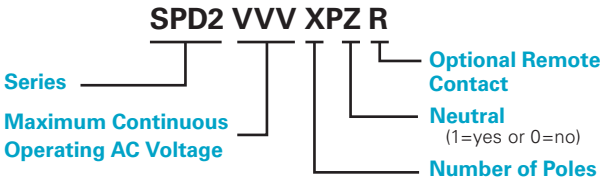

Module Only Part Numbering System



Replacement Module Ordering Information

Ordering Number	IEC Electrical										UL Electrical				Single Unit Weight
	Nominal AC Voltage (50/60Hz) (U_o/U_n)	Maximum Continuous Operating AC Voltage (L-N / N-PE U_c)	Nominal Discharge Current (8/20 µs) (L-N / N-PE I_n)	Maximum Discharge Current (8/20 µs) (L-N / N-PE I_{max})	Voltage Protection Level (L-N / N-PE U_p)	Follow Current Interrupt Rating (N-PE I_{fi})	Short-Circuit AC Current Rating (L-N I_{SCCR})	TOV Withstand 5 s (L-N U_T)	TOV 120 min (L-N U_T) / Mode	TOV Withstand 200 ms (N-PE U_T)	Maximum Continuous AC Operating Voltage (L-N / N-PE MCOV)	Voltage Protection Rating (L-N / N-PE VPR)	Nominal Discharge Current (8/20 µs) (L-N / N-PE I_n)	Short-Circuit Current Rating (L-N SCCR)	
SPD2-040-M	0 V	40 V / 305 V	20 kA / 40 kA	50 kA / 65 kA	1500 V (N-PE)	100 A_{RMS}	25 kA / 50 kA	N/A	N/A	1200 V	305 V (N-PE)	1000 V (N-PE)	20 kA / 20 kA	N/A	42 g (0.093 lb)
SPD2-300-M	240 V	300 V / 305 V	20 kA / 40 kA	50 kA / 65 kA	1500 V / 1500 V	100 A_{RMS}	25 kA / 50 kA	337 V	442 V / Safe Fail	1200 V	300 V / 305 V	900 V / 1000 V	20 kA / 20 kA	150 kA	61 g (0.135 lb)
SPD2-350-M	277 V	350 V / 305 V	20 kA / 40 kA	50 kA / 65 kA	1750 V / 1500 V	100 A_{RMS}	25 kA / 50 kA	403 V	529 V / Safe Fail	1200 V	350 V / 305 V	1000 V / 1000 V	20 kA / 20 kA	200 kA	66 g (0.146 lb)

Specifications

Network Systems IT, TT, TN-S
Mode of Protection L-N, N-PE
Nominal Discharge Current (8/20 µs) (L-N / N-PE I_n) 20 kA/40 kA
Maximum Discharge Current (8/20 µs) (L-N / N-PE I_n) 50 kA/65 kA
Protective Elements High Energy MOV and GDT
Response Time (L-N / N-PE t_A) < 25 ns
Back-Up Fuse (max) 315 A/250 A Gg
Number of Ports 1

Mechanical & Environmental

Operating Temperature Range (T_a) -40 °C to +80 °C (-40 °F to +185 °F)
Permissible Operating Humidity (RH) 5% to 95%
Altitude (max) 4,000 m (13,123 ft)
Terminal Screw Torque) (M_{max}) 4.5 Nm (39.9 lbf-in)
Conductor Cross Section (max) 35 mm² (2 AWG) (Solid, Stranded)/ 25 mm² (4 AWG) (Flexible)
Mounting 35 mm DIN Rail, EN60715
Degree of Protection IP20 (built-in)
Housing Material Thermoplastic: Extinguishing Degree UL 94 V-0
Thermal Protection Yes
Operating State/Fault Indication Green Flag/No Green Flag
Remote Contact Switching Capacity AC: 250 V/1 A, 125 V/1 A; DC: 48 V/0.5 A, 24 V/0.5 A, 12 V/0.5 A
Remote Con Conductor Cross Section (max) 1.5 mm² (16 AWG) (Solid)
Standards Passed IEC 61643-11:2011
EN 61643-11:2012
UL 1449, 4th edition; E320116

Product Dimensions

4TE Module and Base **H** 90.0 mm (3.54"); W 72.0 mm (2.84"); **D** 70.0 mm (2.76")
1TE Replacement Module **H** 45.0 mm (1.77"); **W** 18.0 mm (0.71"); **D** 57.2 mm (2.25")

Package Dimensions

4TE Module and Base **H** 102.0 mm (4.01"); **W** 82.0 mm (3.23"); **D** 110.0 mm (4.33")
1TE Replacement Module **H** 102.0 mm (4.01"); **W** 28.0 mm (1.10"); **D** 110.0 mm (4.33")

Warranty – Visit **www.littelfuse.com/warranty** for details.

Disclaimer Notice – Information furnished is believed to be accurate and reliable. However, users should independently evaluate the suitability of and test each product selected for their own applications. Littelfuse products are not designed for, and may not be used in, all applications. Read complete Disclaimer Notice at **www.littelfuse.com/product-disclaimer.**

© 2019 Littelfuse, Inc.